MODEL：RSE6

RATIO : 41、61、81、121

Unit: mm

Code \ Model	A Type
A	#6802
B	Ø15 $^{-0.01}_{-0.02}$
C	13
D	21.5

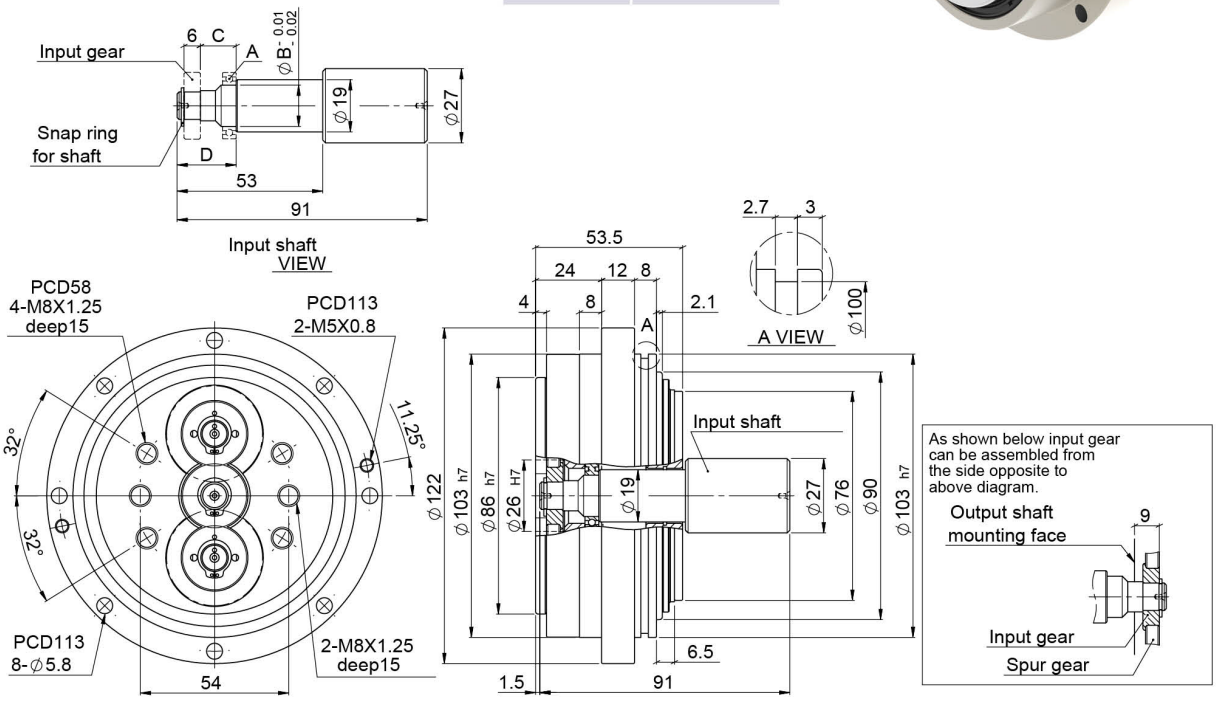

特性 Characteristic	代號	單位 Unit	RSE6
輸出平台支撐軸承 / Output Table Supporting Bearing			斜角滾珠軸承 Angular Contact Ball Bearing
額定輸出扭矩 / Rated Output Torque		Nm	60
最大輸出扭矩 / Max. Output Torque 急停扭矩 / Emergency Stop Torque	T_{2NOT}	Nm	5 倍額定輸出扭矩 5 Time of Rated Output Torque
最大加速力矩 / Max. Acceleration Torque	T_{2B}	Nm	2 倍額定輸出力矩 2 Times of Rated Ouput Torque
慣性慣量 / Inertia Moment		$kg.m^2$	1.15×10^{-4}
額定出力轉速 / Rated Output Speed		rpm	15
最大輸出轉速 / Max. Output Speed		rpm	55
容許輸入轉速 / Permissible Input Speed		rpm	3,000
背隙 / Backlash Ps	J_t	arcmin	≦2
背隙 / Backlash P0	J_t	arcmin	≦4
背隙 / Backlash P1	J_t	arcmin	≦6
容許徑向力 / Max. Radial Force	F_{2rB}	N	2,100
容許軸向力 / Max. Axial Force	F_{2aB}	N	1,500
額定壽命 / Rated Life	L_H	hr	S5 周期運轉 : >6,000 (S1 連續運轉 : >3,000 hrs) S5 Cycle Operation: >6,000 (S1 Continuous Operation: >3,000 hrs)
扭轉剛性 / Torsional Rigidity		Nm/arcmin	50
效率 / Efficiency	η	%	≧85
重量 / Weight		kg	2.8

MODEL：RSE20

RATIO : 41、61、81、121、161

Unit: mm

Code \ Model	A Type
A	#6902
B	Ø15 $^{-0.01}_{-0.02}$
C	16.5
D	26

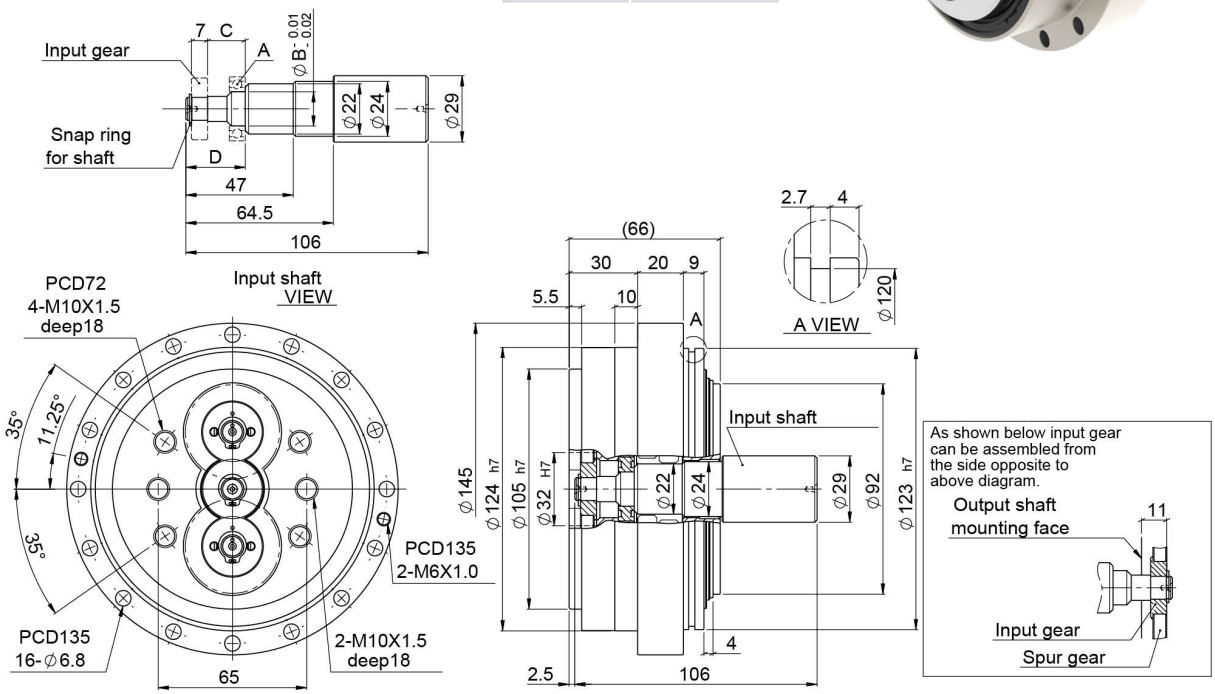

特性 Characteristic	代號	單位 Unit	RSE20
輸出平台支撐軸承 / Output Table Supporting Bearing			斜角滾珠軸承 Angular Contact Ball Bearing
額定輸出扭矩 / Rated Output Torque		Nm	200
最大輸出扭矩 / Max. Output Torque 急停扭矩 / Emergency Stop Torque	T_{2NOT}	Nm	5 倍額定輸出扭矩 5 Time of Rated Output Torque
最大加速力矩 / Max. Acceleration Torque	T_{2B}	Nm	2.5 倍額定輸出力矩 2.5 Times of Rated Ouput Torque
慣性慣量 / Inertia Moment		$kg.m^2$	2×10^{-4}
額定出力轉速 / Rated Output Speed		rpm	15
最大輸出轉速 / Max. Output Speed		rpm	50
容許輸入轉速 / Permissible Input Speed		rpm	3,000
背隙 / Backlash Ps	J_t	arcmin	≦1
背隙 / Backlash P0	J_t	arcmin	≦3
背隙 / Backlash P1	J_t	arcmin	≦5
容許徑向力 / Max. Radial Force	F_{2rB}	N	6,500
容許軸向力 / Max. Axial Force	F_{2aB}	N	4,300
額定壽命 / Rated Life	L_H	hr	S5 周期運轉 : >6,000 (S1 連續運轉 : >3,000 hrs) S5 Cycle Operation: >6,000 (S1 Continuous Operation: >3,000 hrs)
扭轉剛性 / Torsional Rigidity		Nm/arcmin	70
效率 / Efficiency	η	%	≧85
重量 / Weight		kg	5.1

MODEL：RSE40

RATIO : 41、61、81、121、161

Unit: mm

Code \ Model	A Type
A	#6904
B	Ø20 $^{-0.01}_{-0.02}$
C	20
D	30.5

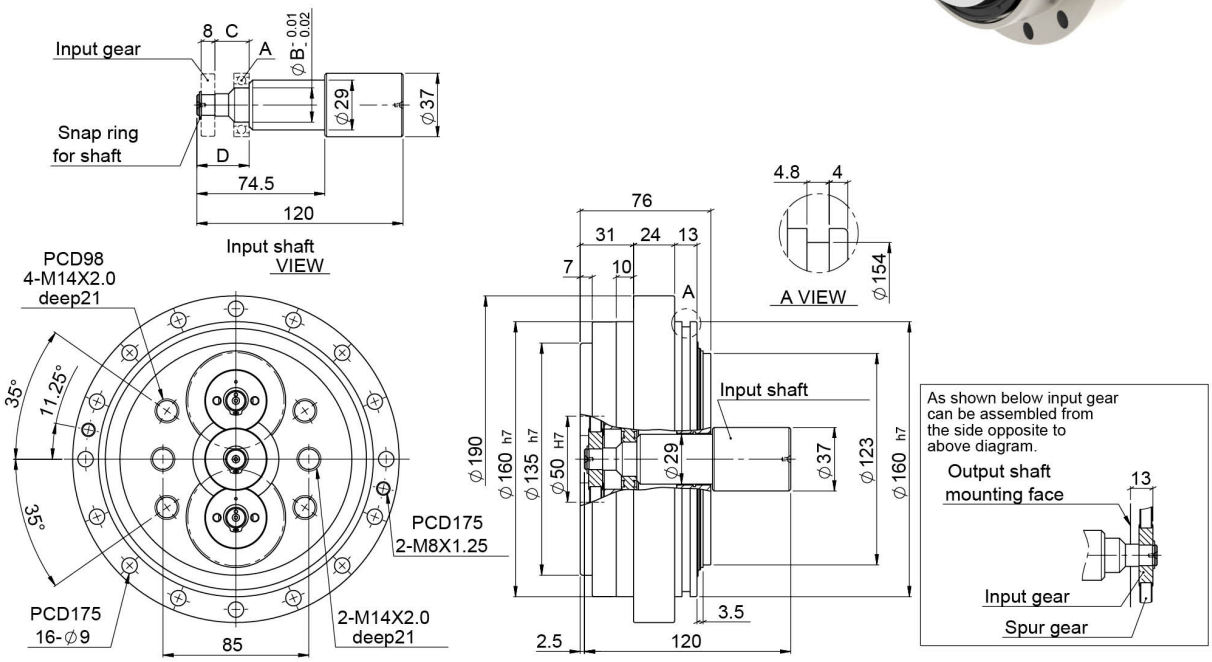

特性 Characteristic	代號	單位 Unit	RSE40
輸出平台支撐軸承 / Output Table Supporting Bearing			斜角滾珠軸承 Angular Contact Ball Bearing
額定輸出扭矩 / Rated Output Torque		Nm	400
最大輸出扭矩 / Max. Output Torque 急停扭矩 / Emergency Stop Torque	T_{2NOT}	Nm	5 倍額定輸出扭矩 5 Time of Rated Output Torque
最大加速力矩 / Max. Acceleration Torque	T_{2B}	Nm	2.5 倍額定輸出力矩 2.5 Times of Rated Ouput Torque
慣性慣量 / Inertia Moment		$kg.m^2$	5×10^{-4}
額定出力轉速 / Rated Output Speed		rpm	15
最大輸出轉速 / Max. Output Speed		rpm	45
容許輸入轉速 / Permissible Input Speed		rpm	3,000
背隙 / Backlash Ps	J_t	arcmin	≦1
背隙 / Backlash P0	J_t	arcmin	≦3
背隙 / Backlash P1	J_t	arcmin	≦5
容許徑向力 / Max. Radial Force	F_{2rB}	N	8,600
容許軸向力 / Max. Axial Force	F_{2aB}	N	5,700
額定壽命 / Rated Life	L_H	hr	S5 周期運轉 : >6,000 (S1 連續運轉 : >3,000 hrs) S5 Cycle Operation: >6,000 (S1 Continuous Operation: >3,000 hrs)
扭轉剛性 / Torsional Rigidity		Nm/arcmin	100
效率 / Efficiency	η	%	≧85
重量 / Weight		kg	9.7

MODEL：RSE80

RATIO : 45、66、81、101、171

Unit: mm

Code \ Model	A Type	B Type (1/101)
A	#6004	#6905
B	Ø20 $^{-0.01}_{-0.02}$	Ø25 $^{-0.01}_{-0.02}$
C	21	18
D	35.5	32.5

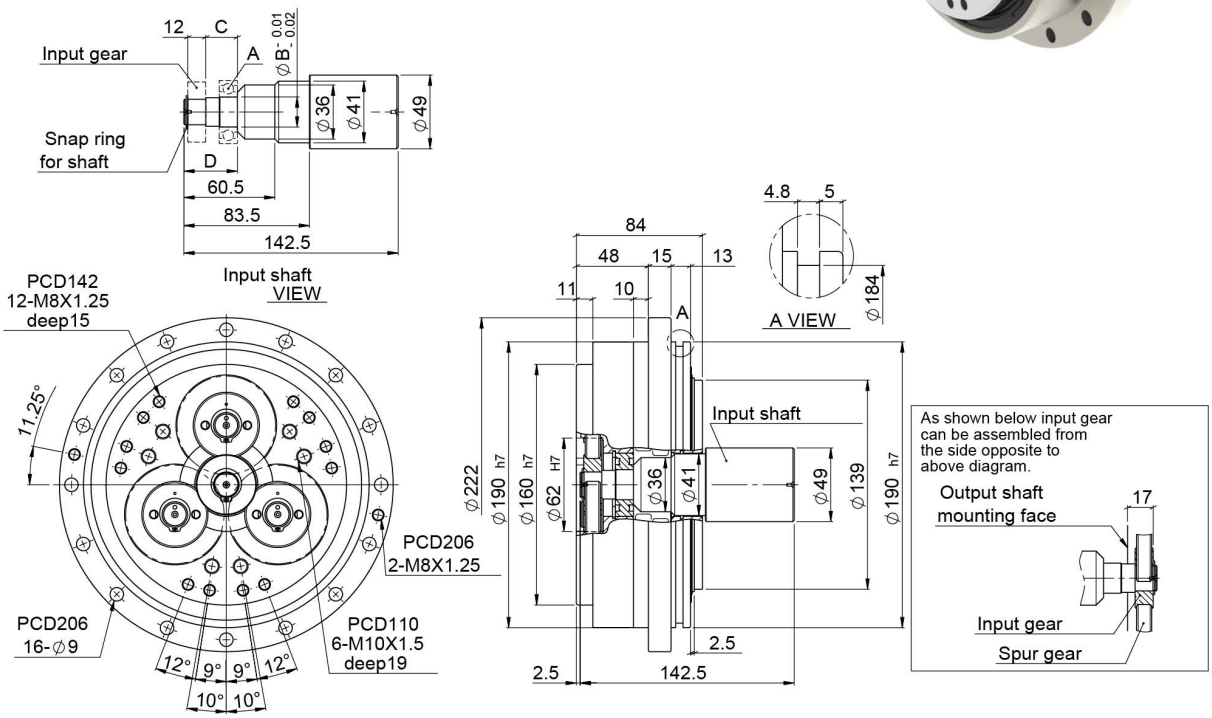

特性 Characteristic	代號	單位 Unit	RSE80
輸出平台支撐軸承 / Output Table Supporting Bearing			斜角滾珠軸承 Angular Contact Ball Bearing
額定輸出扭矩 / Rated Output Torque		Nm	800
最大輸出扭矩 / Max. Output Torque 急停扭矩 / Emergency Stop Torque	T_{2NOT}	Nm	5 倍額定輸出扭矩 5 Time of Rated Output Torque
最大加速力矩 / Max. Acceleration Torque	T_{2B}	Nm	2.5 倍額定輸出力矩 2.5 Times of Rated Ouput Torque
慣性慣量 / Inertia Moment		$kg.m^2$	9×10^{-4}
額定出力轉速 / Rated Output Speed		rpm	15
最大輸出轉速 / Max. Output Speed		rpm	42
容許輸入轉速 / Permissible Input Speed		rpm	3,000
背隙 / Backlash Ps	J_t	arcmin	≦1
背隙 / Backlash P0	J_t	arcmin	≦3
背隙 / Backlash P1	J_t	arcmin	≦5
容許徑向力 / Max. Radial Force	F_{2rB}	N	12,500
容許軸向力 / Max. Axial Force	F_{2aB}	N	8,200
額定壽命 / Rated Life	L_H	hr	S5 周期運轉 : >6,000 (S1 連續運轉 : >3,000 hrs) S5 Cycle Operation: >6,000 (S1 Continuous Operation: >3,000 hrs)
扭轉剛性 / Torsional Rigidity		Nm/arcmin	150
效率 / Efficiency	η	%	≧85
重量 / Weight		kg	15.5

MODEL：RSE110

RATIO : 41、61、81、121、161

Unit: mm

Code \ Model	A Type	B Type (1/121)
A	#6005	#6906
B	Ø25 $^{-0.01}_{-0.02}$	Ø30 $^{-0.01}_{-0.02}$
C	24.5	21.5
D	39	36

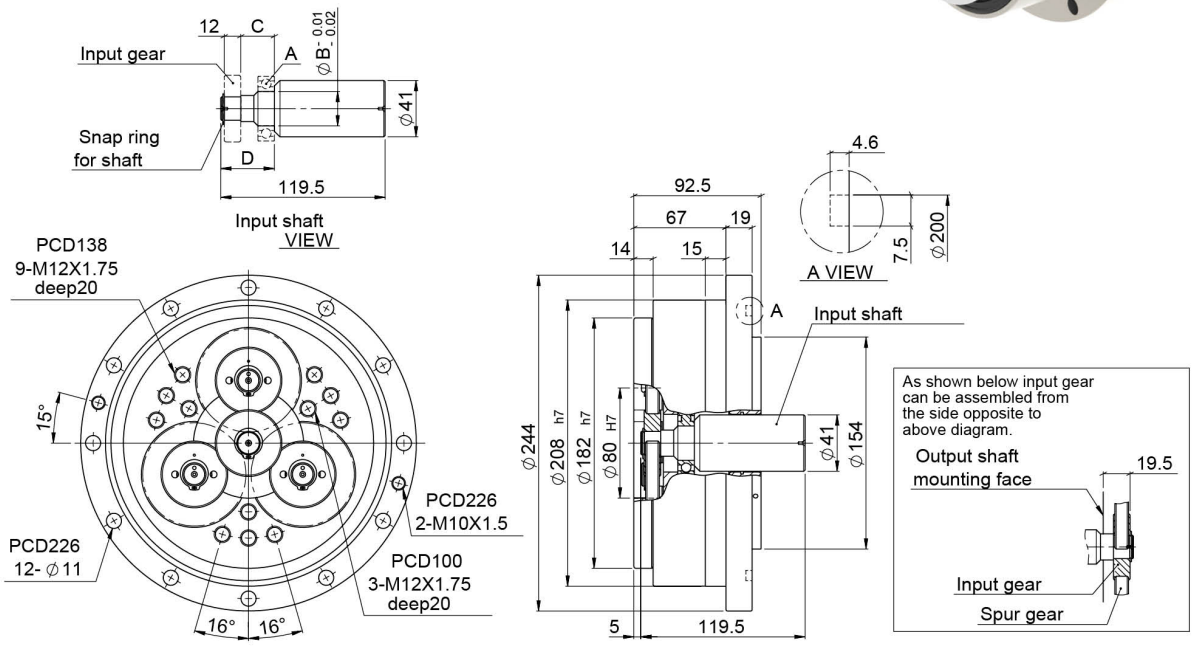

特性 Characteristic	代號	單位 Unit	RSE110
輸出平台支撐軸承 / Output Table Supporting Bearing			斜角滾珠軸承 Angular Contact Ball Bearing
額定輸出扭矩 / Rated Output Torque		Nm	1,100
最大輸出扭矩 / Max. Output Torque 急停扭矩 / Emergency Stop Torque	T_{2NOT}	Nm	5 倍額定輸出扭矩 5 Time of Rated Output Torque
最大加速力矩 / Max. Acceleration Torque	T_{2B}	Nm	2.5 倍額定輸出力矩 2.5 Times of Rated Ouput Torque
慣性慣量 / Inertia Moment		$kg.m^2$	15×10^{-4}
額定出力轉速 / Rated Output Speed		rpm	15
最大輸出轉速 / Max. Output Speed		rpm	35
容許輸入轉速 / Permissible Input Speed		rpm	3,000
背隙 / Backlash Ps	J_t	arcmin	≦1
背隙 / Backlash P0	J_t	arcmin	≦3
背隙 / Backlash P1	J_t	arcmin	≦5
容許徑向力 / Max. Radial Force	F_{2rB}	N	16,000
容許軸向力 / Max. Axial Force	F_{2aB}	N	12,000
額定壽命 / Rated Life	L_H	hr	S5 周期運轉 : >6,000 (S1 連續運轉 : >3,000 hrs) S5 Cycle Operation: >6,000 (S1 Continuous Operation: >3,000 hrs)
扭轉剛性 / Torsional Rigidity		Nm/arcmin	210
效率 / Efficiency	η	%	≧85
重量 / Weight		kg	20.5

MODEL：RSE160

RATIO : 41、61、81、121、161

Unit: mm

Code \ Model	A Type	B Type (1/121)
A	#6006	#6907
B	Ø30 $^{-0.01}_{-0.02}$	Ø35 $^{-0.01}_{-0.02}$
C	26.5	23.5
D	43.5	40.5

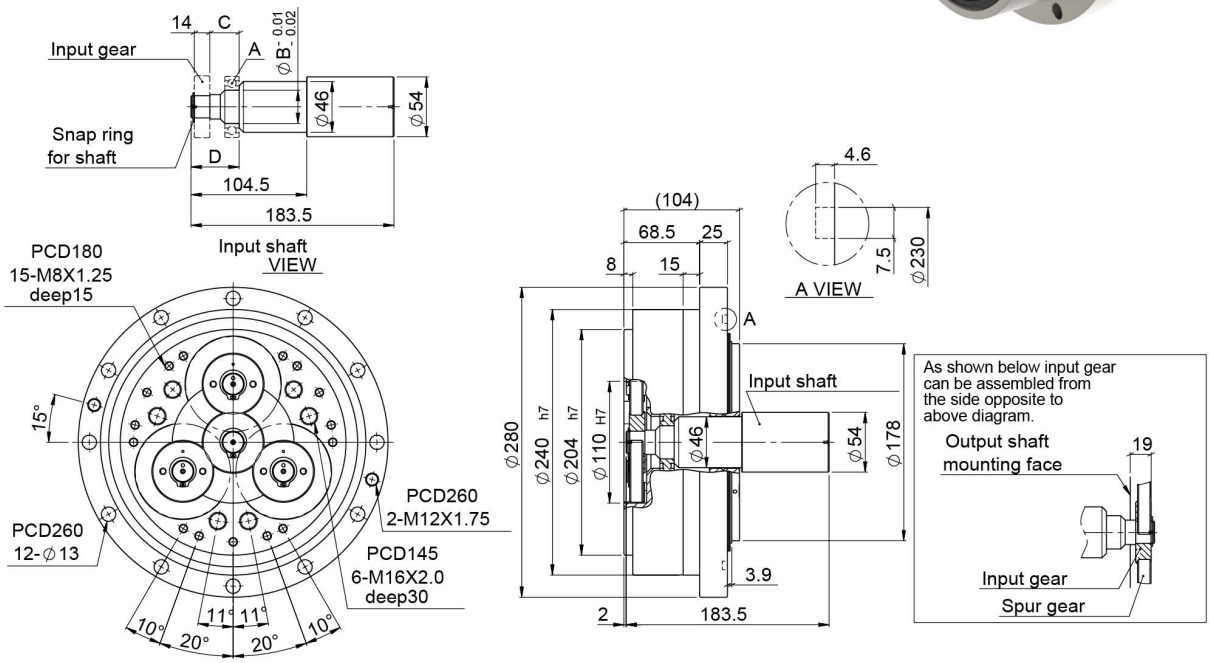

特性 Characteristic	代號	單位 Unit	RSE160
輸出平台支撐軸承 / Output Table Supporting Bearing			斜角滾珠軸承 Angular Contact Ball Bearing
額定輸出扭矩 / Rated Output Torque		Nm	1,600
最大輸出扭矩 / Max. Output Torque 急停扭矩 / Emergency Stop Torque	T_{2NOT}	Nm	5 倍額定輸出扭矩 5 Time of Rated Output Torque
最大加速力矩 / Max. Acceleration Torque	T_{2B}	Nm	2.5 倍額定輸出力矩 2.5 Times of Rated Ouput Torque
慣性慣量 / Inertia Moment		$kg.m^2$	25×10^{-4}
額定出力轉速 / Rated Output Speed		rpm	15
最大輸出轉速 / Max. Output Speed		rpm	27
容許輸入轉速 / Permissible Input Speed		rpm	3,000
背隙 / Backlash Ps	J_t	arcmin	≦1
背隙 / Backlash P0	J_t	arcmin	≦3
背隙 / Backlash P1	J_t	arcmin	≦5
容許徑向力 / Max. Radial Force	F_{2rB}	N	19,000
容許軸向力 / Max. Axial Force	F_{2aB}	N	15,000
額定壽命 / Rated Life	L_H	hr	S5 周期運轉 : >6,000 (S1 連續運轉 : >3,000 hrs) S5 Cycle Operation: >6,000 (S1 Continuous Operation: >3,000 hrs)
扭轉剛性 / Torsional Rigidity		Nm/arcmin	300
效率 / Efficiency	η	%	≧85
重量 / Weight		kg	31.7

MODEL：RSE320

RATIO : 41、61、81、121、161

Unit: mm

Code \ Model	A Type
A	#6007
B	Ø35 $^{-0.01}_{-0.02}$
C	32
D	51

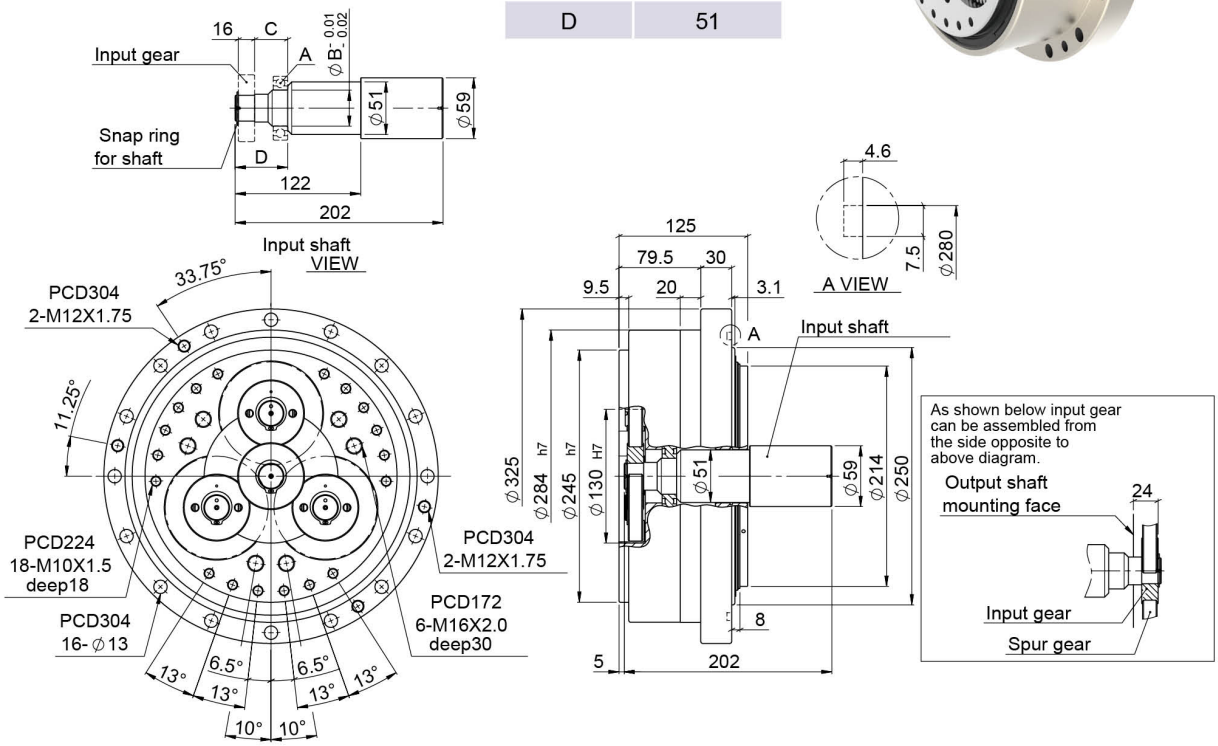

特性 Characteristic	代號	單位 Unit	RSE320
輸出平台支撐軸承 / Output Table Supporting Bearing			斜角滾珠軸承 Angular Contact Ball Bearing
額定輸出扭矩 / Rated Output Torque		Nm	3,200
最大輸出扭矩 / Max. Output Torque 急停扭矩 / Emergency Stop Torque	T_{2NOT}	Nm	5 倍額定輸出扭矩 5 Time of Rated Output Torque
最大加速力矩 / Max. Acceleration Torque	T_{2B}	Nm	2.5 倍額定輸出力矩 2.5 Times of Rated Ouput Torque
慣性慣量 / Inertia Moment		$kg.m^2$	32×10^{-4}
額定出力轉速 / Rated Output Speed		rpm	15
最大輸出轉速 / Max. Output Speed		rpm	21
容許輸入轉速 / Permissible Input Speed		rpm	3,000
背隙 / Backlash Ps	J_t	arcmin	≦1
背隙 / Backlash P0	J_t	arcmin	≦3
背隙 / Backlash P1	J_t	arcmin	≦5
容許徑向力 / Max. Radial Force	F_{2rB}	N	25,300
容許軸向力 / Max. Axial Force	F_{2aB}	N	20,000
額定壽命 / Rated Life	L_H	hr	S5 周期運轉 : >6,000 (S1 連續運轉 : >3,000 hrs) S5 Cycle Operation: >6,000 (S1 Continuous Operation: >3,000 hrs)
扭轉剛性 / Torsional Rigidity		Nm/arcmin	980
效率 / Efficiency	η	%	≧85
重量 / Weight		kg	50.8