WF系列平行轴斜齿减速器
WF SERIES PARALLEL SHAFTGHELICALGEARMOFOR

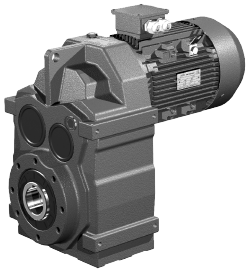

WFAB型Model WFAB
底脚空心轴安装平行轴斜齿轮减速机
Foot-mounted parallel shaft helical gear reductor with hollow shaft

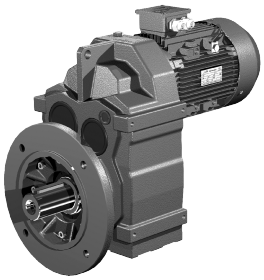

WFF型 Model WFF
B5法兰安装平行轴斜齿轮减速机
Parallel shaft helical gear reductor in B5 flange-mounted version

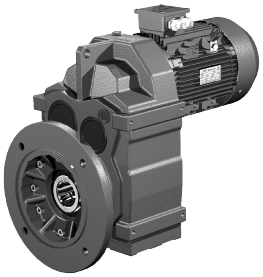

WFAF型 Model WFAF
B5法兰空心轴安装平行轴斜齿轮减速机
Parallel shaft helical gear reductor in B5 flange-mounted version with hollow shaft

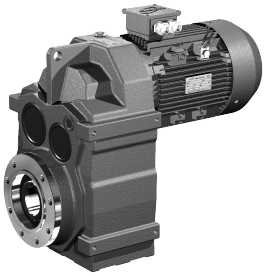

WFAZ型 Model WFAZ
小法兰空心轴安装平行轴斜齿轮减速机
Short-flange mounted parallel shaft helical gear reducror with hollow shaft

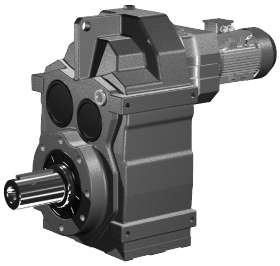

WF..WR型 Model WF..WR
WF系列与WR..7系列组合减速机
Combination of WF series reductor and WR..7 series reductor

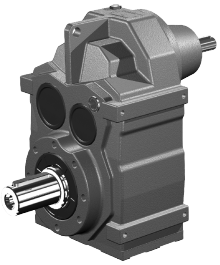

WF..S型 Model WF..S
输入轴型，即配输入轴不配电动机的平行轴斜齿轮减速机
Input-shaft style, in another word, parallel shaft helical gear reductor equipped with input shaft but without the motor

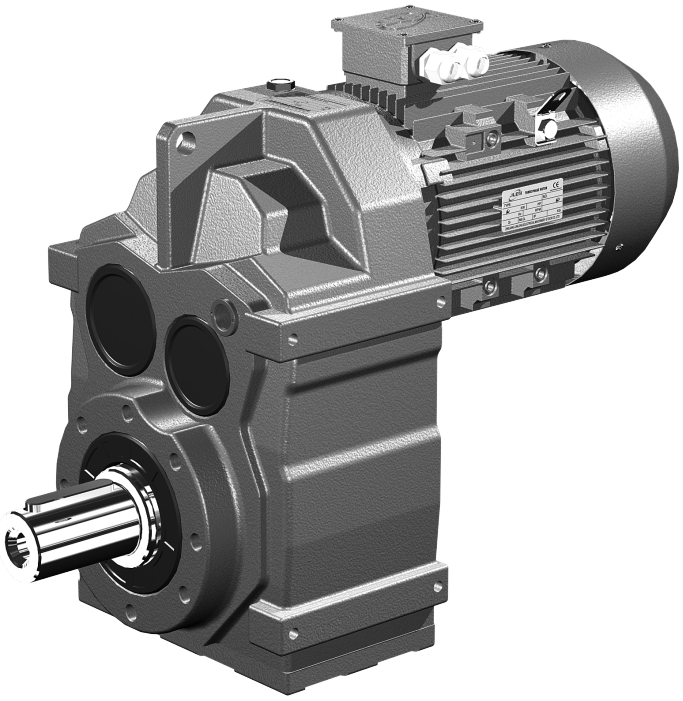

WF型 Model WF
底脚安装平行轴斜齿轮减速机
Foot-mounted parallel shaft helical gear reductor

一、性能特点 Characteristics：

1. 午马减速机是在模块组合体系的基础上设计的，可以方便地配用各种型式的电动机或采用其它动力输入。同种机型可配用多种功率的电动机。容易实现各种机型之间的组合联接。
2. 传动效率高，单机型减速机效率高达96%。
3. 传动比划分细，范围广。组合机型可以形成较大的传动比，输出转速低。
4. 安装形式多样：可任意底脚、B5法兰或B14 法兰安装，底脚安装减速机有两个机加工的底脚安装平面。

1. WUMA reductors are based on the building block design, so it's convenient for them to fit all types of motors or to connect with other power input. The same type of reductors can fit motors with different power, so that it's possible for different types of machines to combine or connect.
2. High transmission efficiency. A single machine can reach a transmission efficiency as much as 96%.
3. Precise division of transmission ratio with a wide range. The combination of machines can produce a larger transmission ratio at a low output rotational speed.
4. Various ways of installation. Horizontal installation at any position or flanged installation, The bottom feet installs the machine that deceleration machine have two bottom feets processes to install the flat surface.

二、场所条件 Working Environment：

1. 环境温度–40℃~50℃。(0℃以下启动时润滑油要加热到0℃以上。)
2. 海拔不超过1000米。
3. 输入转速不大于1800rpm，齿轮最高圆周速度不超过22m/s。
4. 可用于正反运转。
5. 无行业限制。
6. 其他条件下使用请与我公司技术部联系。

1. Working temperature: –40℃~50℃ (The lubrication should be heated until above 0℃ if the machine works Below 0℃.)
2. The working place should be lower than 1,000 meters above sea level.
3. The imput rotational speed should not exceed 1,800r/m. The circumferential speed of the gear should not exceed 20m/s.
4. Suitable for normal–reverse rotation.
5. Without industry limitation.
6. Please consult our technical supporting department for other circumstances.

三、选型指南 Instructions for Selection：

在确定使用系数之前必须先确定一天的运行小时数，每小时的起停次数和负载类型。其中负载类型按下列公式计 算：

The daily operating time, the starting frequency and the load classifications be determined before deciding the service facor. The load classifications is calculated with the following formula:

负载类型 Load classification

Ⅰ均匀负载，惯性加速系数≤0.2
Ⅱ中等冲击负载，惯性加速系数≤3
Ⅲ强烈冲击负载，惯性加速系数≤10
Uniform load, mass acceleration factor≤0.2
Medium Impact Load, mass acceleration factor≤3
Heavy shock Load, mass acceleration factor≤10

如果惯性加速系数＞10，请与我公司技术部联系。

$$\text{惯性加速系数} = \frac{\text{所有外部转动惯量}}{\text{驱动电机的转动惯量}}$$

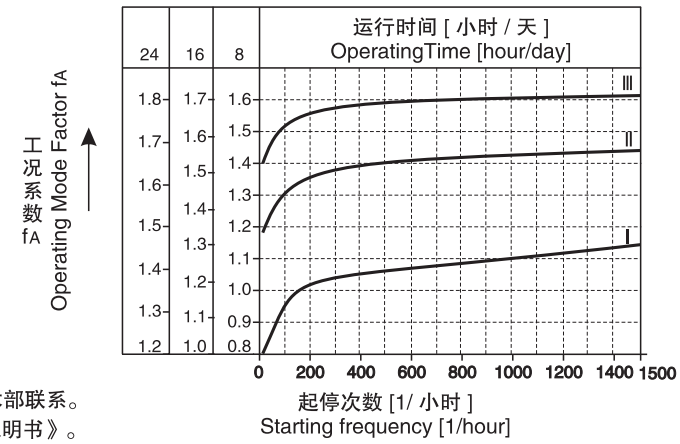

实际的工况系数fA必须满足下式：使用系数fB≥工况系数fA

使用系数fB已在后面的选型参数表中列出。

允许的轴伸径向载荷及轴向载荷

输出轴端允许的径向载荷及轴向载荷资料，请与我公司技术部联系。

减速机的使用与维护请参阅随机附带的《减・变速机使用说明书》。

Please contact our technical supporting department in case the mass acceleration factor>10.

$$\text{Mass acceleration factor} = \frac{\text{All external mass moments of Inertia}}{\text{Mass moment of inertia on the motor end}}$$

The actural operating mode factor (f_A) should meet the following formula: Service factor f_B ≥operating mode factor f_A

The service factor f_B is listed in the parameter selection list.

The permitted overhung loads and the axial forces.

Please contact our technical supporting department for the information on the permitted overhung loads and the axial forces at the output end of the shaft.

Regarding the use and maintenance of the reductor, please refer to the attached Instruction Manual of the Reductor and the Variable Speed Motor.

WF系列结构图:/WFseries structrue drawing:

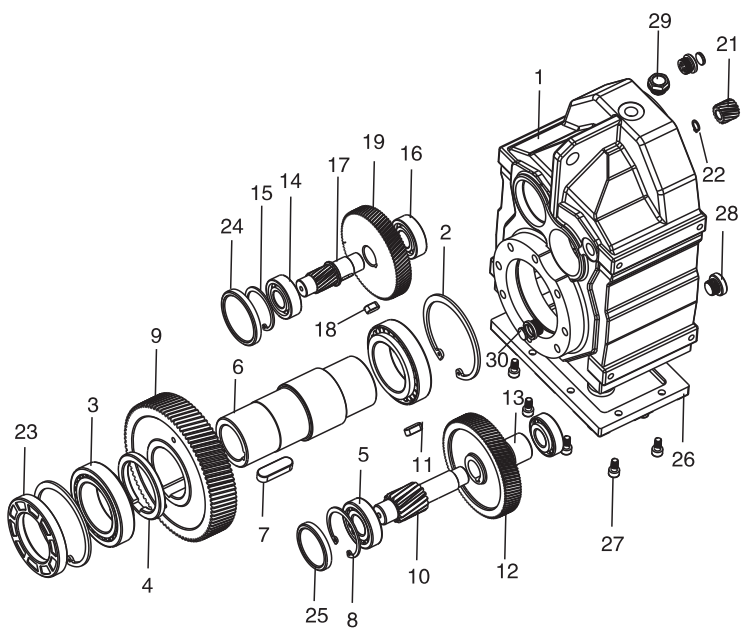

1 箱体 Housing
2 孔用挡圈 Circlip for hole
3 轴承 Bearing
4 垫圈 Washer
5 轴承 Bearing
6 空出轴 Output shaft
7 平键 Key
8 孔用挡圈 Circlip for hole
9 输出大齿轮 First-stafe big gear
10 三级齿轮轴 Second-stage gear shaft
11 平键 Key
12 二级大齿轮 Second-stage big gear
13 轴套 Shaft sleeve
14 轴承 Bearing
15 孔用挡圈 Circlip for hole
16 轴承 Bearing
17 二级齿轮轴 Second-stage gear shaft
18 平键 Key
19 一级大齿轮 First-stage big gear
21 一级小齿轮 First-stage big gear
22 轴用挡圈 Circlip for shaft
23 油封 Oil seal
24 封盖 Grand
25 封盖 Grand
26 下端盖 Cover plate
27 螺栓 Bolt
28 通气帽 Breather
29 通气帽 Breather
30 油镜 Oil gauge

WF系列平行轴斜齿轮减速器型号规格及机型表示方法:

本系列减速器的型号规格有:WF(37、47、57、67、77、87、97、107、127、157）等10种，减速比有4.07～205等多种速比，可分别配置0.18～132KW。

Type,specification and model notation for WF series parallel shaft bevel gear speed reducers.:

Types,specifications of this series speed reducer have 10 kinds including WF 37、47、57、67、77、87、97、107、127、157 etc, speed reducing ratio:4.07～205, which can be allocated to 0.18～132kW.

五、型号说明 Instructions for Models：

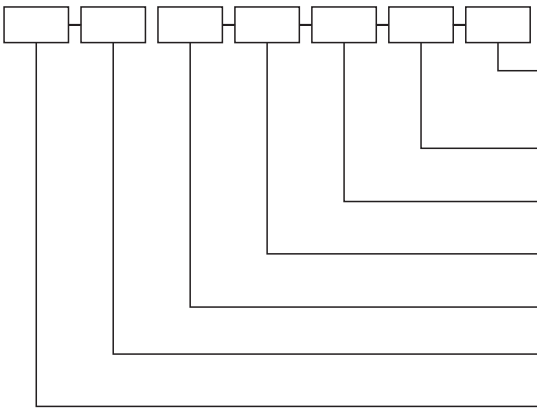

电机接线盒方向(角度）
The direction (angle) of the motor connection box

安装形式
Mounting position

传动比
Ratio

电机极数
Motor pole

电机功率
Motor power

电机类型代号
The codes for motor types

减速机结构形式和规格
The mounting type of the reductor and Specifications

例：

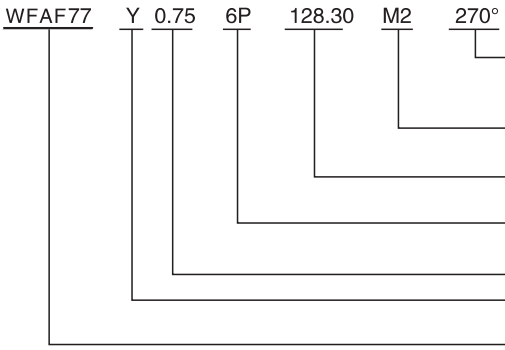

电机接线盒在图示270° 处
The motor connecting box is at the position of 270° in the mounting postion example.

安装形式：M2
Mounting position: M2

传动比：128.30
Ratio:128.30

6极
Poles 6

0.75kW

Y系列电机
Motors of Y series

WFAF型77规格
Specifications 77 for model WFAF

注：1.输入轴型没有电动机的各项内容。
2.无特别说明时Y系列电动机供货按IP54防护等级。
3.不注明安装形式时，按安装形式图 中M1安装形式供货。
4.不注明接线盒角度时，按安装形式图 中0度位置供货。
5.对输出旋转方向与输入旋转方向有特殊要求的用户，请与我公司技术部联系。
6.电机尺寸请查看电机外型尺寸表。

Note:1. The input–shaft style is not equipped with any motor
2. Motors of Y series are supplied with protection grade of IP54 unless otherwise specified.
3. The mounting position of M1 as shown in the mounting position example is the default way when supplying unless otherwise specified.
4. 0° as shown in the mounting position example is the default connection box angle when supplying unless otherwise specified.
5. Please contact our technical supporting department in case there's any special requirements on the output and input rotatory directions.
6. About Motor size,please check table of motor's dimensions.

六、电机类型代号 Codes for Motor Types：

Y系列 Y series	Y	防爆电机 Flame-proof Motor	YB	直流电机 Direct Current Motor	Z
制动电机 Brake Motor	YEJ	辊道电机 Roll Motor	YG	变频电机 Variable Frequency Motor	YVP

七、联接法兰L2长度 Length of Connect Flange L2

WF..系列平行轴斜齿轮减速机联接法兰L2长度表
The form on length of the connect flange L2 of the parallel shaft helical gear reductor of WF.. series

电机机座号 Motor frame size / 减速机型号 Reductor type	63	71	80	90	100	112	132	160	180	200	225	250	280	315
WF..37	61.5	61.5	80	80	98	—	—	—	—	—	—	—	—	—
WF..47	61.5	61.5	80	80	98	—	—	—	—	—	—	—	—	—
WF..57	56	56	74.5	74.5	90.5	90.5	—	—	—	—	—	—	—	—
WF..67	56	56	74.5	74.5	90.5	90.5	123	—	—	—	—	—	—	—
WF..77	50	50	68.5	68.5	82.5	82.5	111	152.5	—	—	—	—	—	—
WF..87	—	—	63.5	63.5	78.5	78.5	106	147.5	147.5	—	—	—	—	—
WF..97	—	—	—	57.5	72.5	72.5	101	142.5	142.5	144.5	—	—	—	—
WF.107	—	—	—	—	66.5	66.5	95	136.5	136.5	138.5	168.5	—	—	—
WF.127	—	—	—	—	—	—	80	121.5	121.5	123.5	153.5	153.5	153.5	—
WF.157	—	—	—	—	—	—	—	113.5	113.5	115.5	145.5	145.5	145.5	184

八、安装形式图释义 Explanation of mounting position example


通气孔
Breather valve


油位孔
Oil level plug


放油孔
Oil drain plug

九、选型参数表释义 Explanation of Parameter Selection List

电机功率 Power (kW)	输出转速 Output speed (r/min)	输出转矩 Output torque (N・m)	传动比 Ratio (i)	使用系数 Service factor (fB)	机型号 Type	电机极数 Motor pole	重量 Weight (kg)
0.75	4.5	1603	203.70	0.89	WF 77	6P	99
	4.8	1500	190.60	0.95	WFA 77	6P	110
	5.4	1325	168.40	1.08	WFF 77	6P	96
	6.4	1120	142.30	1.27	WFAF77	6P	102
	7.1	1010	128.30	1.41			

WF系列安装方位图/WF series installation direction diagram

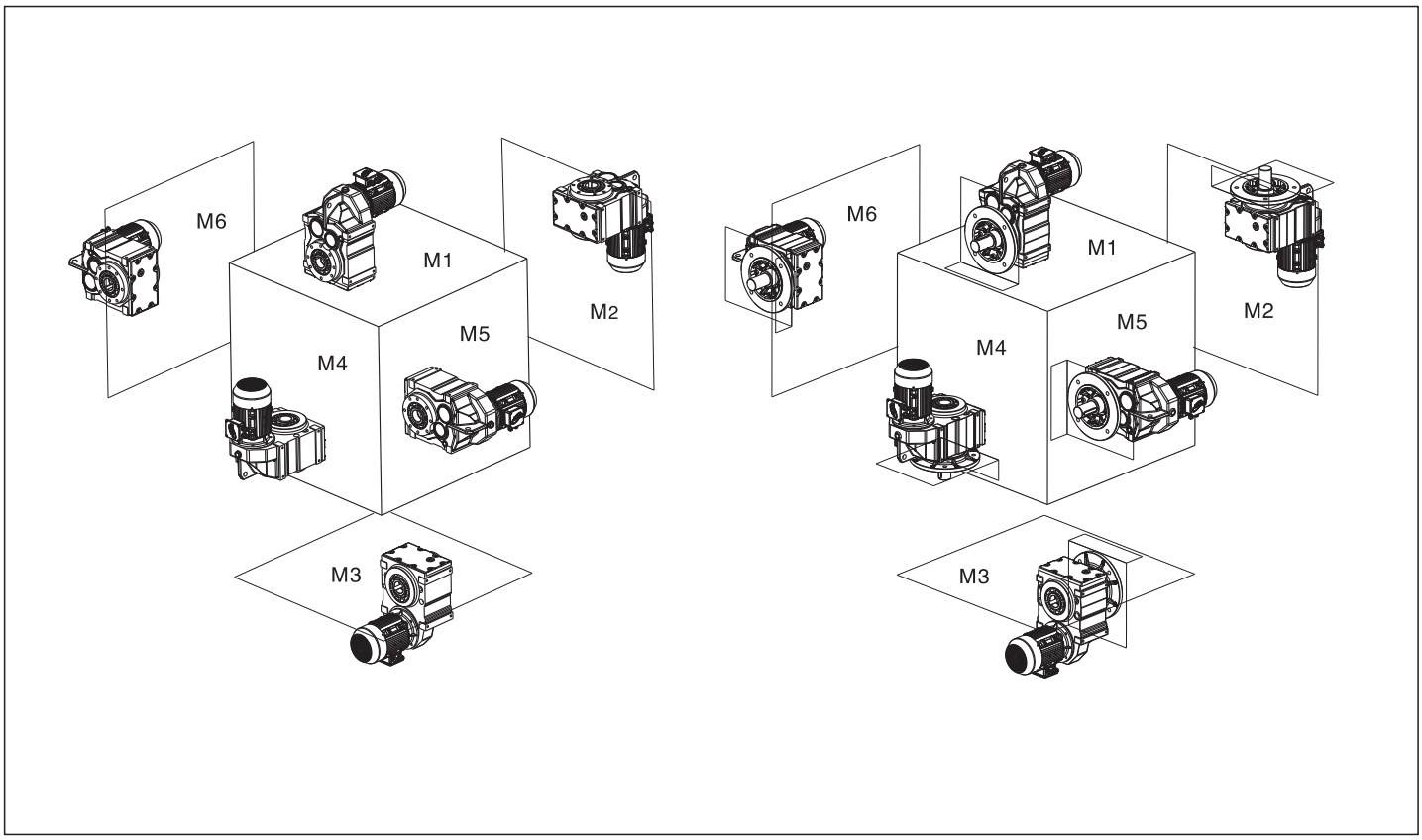

WF系列油量表(单位kg) / WF series oil capacity table (Unit:kg)

安装方位 / 机型号	M1	M2	M3	M4	M5	M6
WF37	1	1.2	0.7	1.2	1	1.1
WF47	1.5	1.8	1.1	1.9	1.5	1.7
WF57	2.5	3.6	2	3.4	2.7	2.8
WF67	2.7	3.8	2.1	3.9	2.9	3.2
WF77	5.1	7.3	4.4	8.2	6.1	6.3
WF87	9.3	12	7.1	12.8	10	10.2
WF97	20.8	25.3	14.2	28.4	20.8	22.5
WF107	26	32	20	39	28	29
WF127	42	56	34	65	46	49
WF157	72	103	65	104	85	80

WF系列重量表 / WF SERIES WEIGHT TABLE

机型号/Type	WF37	WF47	WF57	WF67	WF77	WF87	WF97	WF107	WF127	WF157
重量kg/Weight kg	13	16.5	27	31	55	100	170	260	400	700

注：表中重量为不加油时重量，带输入轴、输入法兰另加10%;带电机根据所配规格另加。

Note: Weight in the table means the weight when oil is not added. When input shaft is furnished, 10% weight should be added; Ifthere is a motor, please add weight according to motor type.

WF/WFAB37–157 安装形式图　WF/WFAB37–157 Mounting position example

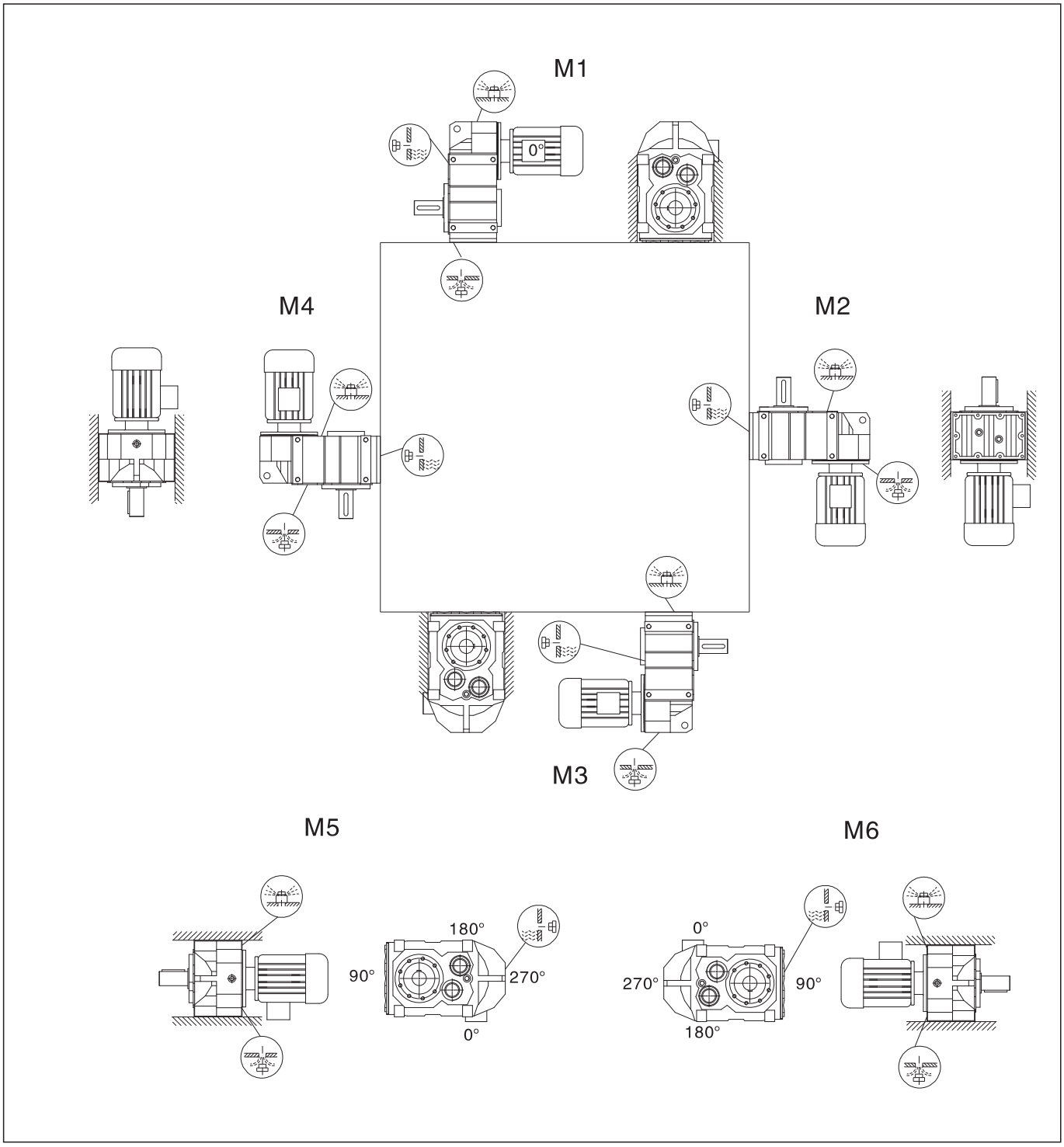

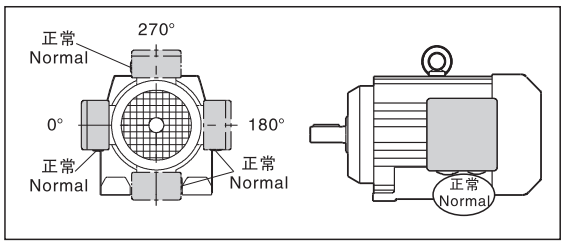

WF/WFAT37–157 安装形式图　WF/WFAT37–157 Mounting position example

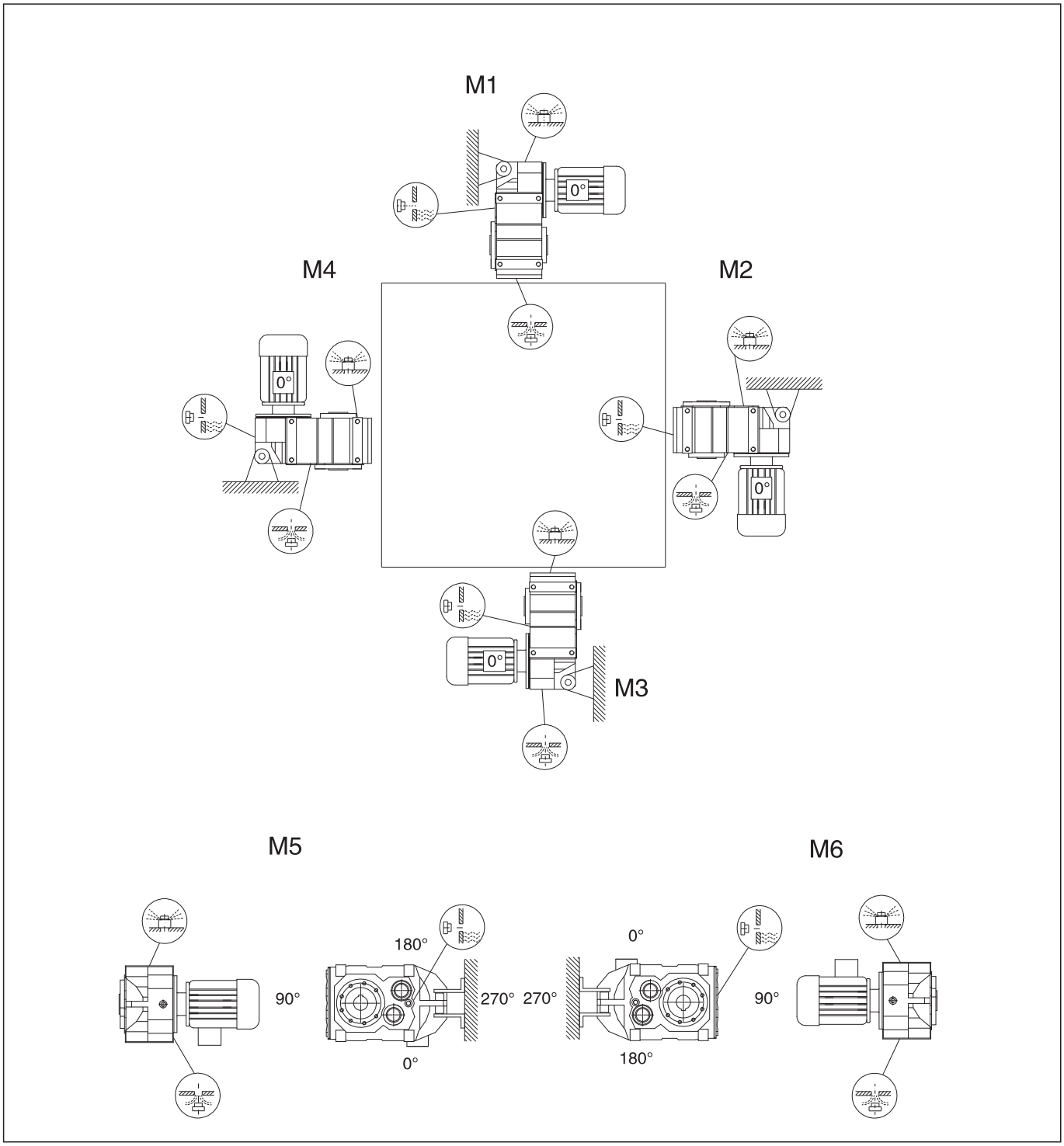

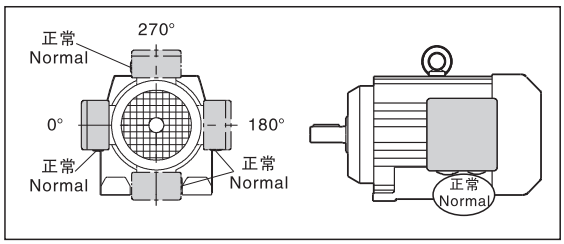

WFF/WFAF/WFAZ 37–157安装形式图WFF/WFAF/WFAZ 37–157 Mounting position example

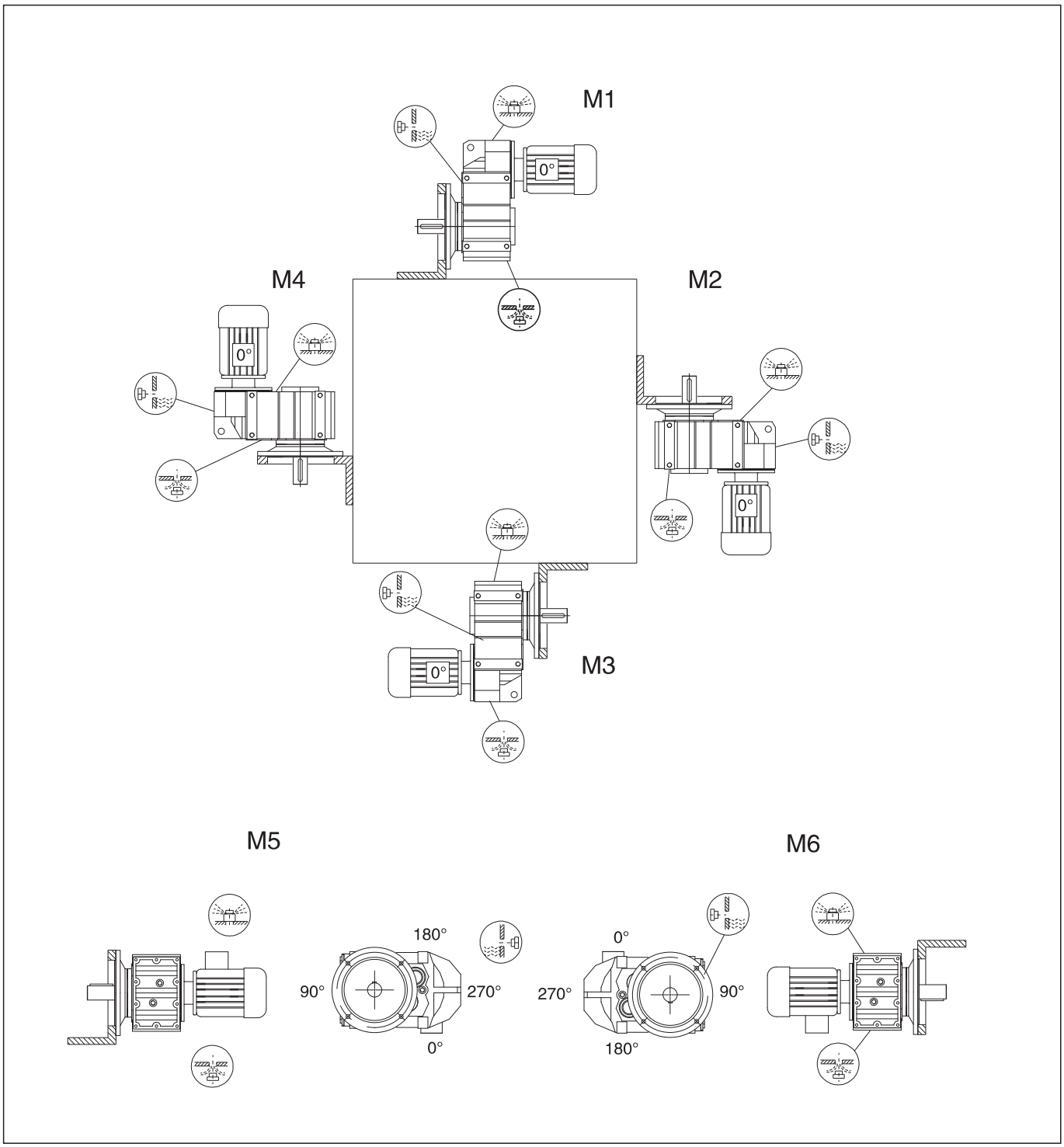

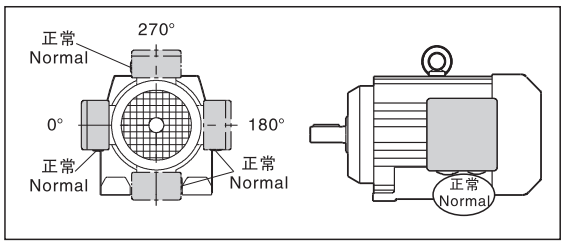

输出转速 Output speed (r/min)	输出转矩 Output torque (N.M)	传动比 Ratio (i)	使用系数 Service factor (f_B)	机型号 Type	电机级数 Motor pole
0.12KW					
0.06	15000	22323	0.80	WFA 127WR77 WFAF127WR77 WF 127WR77 WFF 127 WR77	4P
0.07	12600	19048	0.95		
0.08	10800	16656	1.10		
0.09	9870	14722	1.20		
0.11	7980	12912	1.50		
0.12	7090	11656	1.70		
0.14	6300	10191	1.90		
0.09	9590	14767	0.80	WFA 107WR77 WFAF107WR77 WF 107WR77 WFF 107 WR77	4P
0.12	7610	11348	1.00		
0.14	5890	10039	1.30		
0.16	4880	8548	1.55		
0.18	4740	7674	1.60		
0.20	4120	6767	1.85		
0.23	3530	5954	2.2		
0.26	3070	5223	2.5		
0.30	2890	4567	2.7		
0.39	2140	3521	3.6		
0.19	4800	7328	0.90	WFA 97WR57 WFAF97WR57 WF 97WR57 WFF 97WR57	4P
0.21	4040	6469	1.05		
0.25	3680	5615	1.15		
0.28	3200	4961	1.35		
0.32	2800	4333	1.55		
0.35	2550	3906	1.70		
0.41	2210	3352	1.95		
0.47	1820	2907	2.4		
0.54	1670	2553	2.6		
0.28	3250	4954	0.90	WFA 87WR57 WFAF87WR57 WF 87WR57 WFF 87WR57	4P
0.33	2690	4245	1.00		
0.37	2200	3721	1.35		
0.43	2140	3244	1.40		
0.48	1900	2881	1.60		
0.54	1700	2576	1.75		
0.63	1440	2199	2.1		
0.72	1240	1930	2.4		
0.81	1120	1709	2.7		
0.92	980	1493	3.0		
1.1	785	1300	3.8		
1.2	710	1148	4.2		
0.53	1750	2613	0.85	WFA 77WR37 WFAF77WR37 WF 77WR37 WFF 77WR37	4P
0.60	1520	2284	1.00		
0.68	1340	2029	1.10		
0.80	1130	1728	1.35		
0.89	1040	1544	1.45		
1.0	910	1354	1.65		
1.1	810	1200	1.85		
1.3	710	1053	2.1		
1.5	605	910	2.5		
1.7	501	810	2.9		
1.9	445	710	3.4		
0.97	920	1429	0.90	WFA 67WR37 WFAF67WR37 WF 67WR37 WFF 67WR37	4P
1.1	830	1271	1.00		
1.2	700	1102	1.15		
1.4	615	970	1.35		
1.6	540	858	1.50		
1.8	475	755	1.75		
2.2	405	641	2.0		
2.4	375	572	2.2		
2.7	320	509	2.6		
3.2	275	437	3.0		
1.4	655	967	0.90	WFA 57WR37 WFAF57WR37 WF 57WR37 WFF 57 WR37	4P
1.6	585	851	1.05		
1.9	500	738	1.20		
2.1	435	646	1.40		

输出转速 Output speed (r/min)	输出转矩 Output torque (N.M)	传动比 Ratio (i)	使用系数 Service factor (f_B)	机型号 Type	电机级数 Motor pole
0.12KW					
2.5	370	558	1.60	WFA 57WR37 WFAF57WR37 WF 57WR37 WFF 57 WR37	4P
2.7	330	506	1.80		
3.0	285	452	2.1		
3.2	295	426	2.0		
3.6	260	382	2.3		
4.2	225	330	2.7		
4.6	200	298	3.0		
5.3	177	262	3.4		
2.2	425	622	0.95	WFA 47WR17 WFAF47WR17 WF 47WR17 WFF 47 WR17	4P
2.5	370	543	1.10		
2.9	320	475	1.25		
3.3	280	419	1.45		
2.6	365	524	1.10		
2.8	340	489	1.20		
3.2	290	427	1.35		
3.6	260	381	1.55		
4.1	225	334	1.75		
4.7	198	295	2.0		
5.4	166	253	2.4		
4.3	210	322	0.95	WFA 37WR17 WFAF37WR17 WF 37WR17 WFF 37 WR17	4P
5.0	184	278	1.10		
5.7	157	242	1.30		
6.2	149	221	1.35		
4.2	225	326	0.90		
4.8	195	285	1.05		
5.5	170	250	1.20		
6.3	150	219	1.35		
7.4	127	186	1.60		
8.3	114	167	1.75		
3.9	290	228.99	2.8	WFA 67 WFAF67 WF 67 WFF 67	4P
4.6	250	195.39	3.3		
5.3	220	170.85	3.8		
5.6	205	162.31	4.0		
6.3	181	142.40	4.5		
4.5	255	199.70	2.4	WFA 57 WFAF57 WF 57 WFF 57	4P
4.9	235	183.60	2.6		
5.7	200	157.09	3.0		
6.6	173	136.16	3.5		
7.1	162	127.27	3.7		
6.9	166	199.70	3.6		
7.5	153	183.60	3.9		
8.8	130	157.09	4.6		
10	113	136.16	5.3		
4.7	245	190.76	1.65	WFA 47 WFAF47 WF 47 WFF 47	6P
5.1	225	175.38	1.80		
6.0	191	150.06	2.1		
6.9	166	130.07	2.4		
7.4	155	121.57	2.6		
8.6	134	105.09	3.0		
10	114	89.29	3.5		
11	102	79.72	3.9		
7.2	158	190.76	2.5	WFA 47 WFAF47 WF 47 WFF 47	4P
7.9	146	175.38	2.8		
9.2	125	150.06	3.2		
11	108	130.07	3.7		
7.0	164	128.51	1.20	WFA 37 WFAF37 WF 37 WFF 37	6P
7.6	150	117.88	1.35		
9.0	128	100.36	1.55		
10	110	86.53	1.80		
11	103	80.65	1.95		

输出转速 Output speed (r/min)	输出转矩 Output torque (N.M)	传动比 Ratio (i)	使用系数 Service factor (f_B)	机型号 Type	电机级数 Motor pole
0.12KW					
11	107	128.51	1.85	WFA 37 WFAF37 WF 37 WFF 37	4P
12	98	117.88	2.0		
14	83	100.36	2.4		
16	72	86.53	2.8		
17	67	80.65	3.0		
20	59	70.50	3.4		
21	55	66.09	3.6		
24	48	58.32	4.1		
25	45	54.54	4.4		
27	43	51.70	4.7		
29	39	47.02	5.1		
31	36	43.83	5.5		
36	32	38.31	6.3		
38	30	35.91	6.7		
44	26	31.69	7.6		
49	23	28.09	8.6		
58	20	23.88	10		
58	20	23.63	10		
67	17	20.57	12		
72	16	19.27	13		
81	14	17.03	14		
87	13	15.81	15		
96	12	14.33	17		
107	11	12.87	19		
125	9.2	11.08	21		
132	8.7	10.42	21		
154	7.4	8.97	24		
186	6.2	7.44	23		
205	5.6	6.74	25		
228	5.0	6.05	27		
265	4.3	5.21	29		
282	4.1	4.90	29		
327	3.5	4.22	31		
0.18KW					
0.10	13500	12912	0.90	WFA 127WR77 WFAF127WR77 WF 127WR77 WFF 127 WR77	4P
0.11	12100	11656	1.00		
0.13	10700	10191	1.10		
0.15	8980	8831	1.35		
0.17	7770	7643	1.55		
0.20	7150	6715	1.70		
0.15	8560	8548	0.90	WFA 107WR77 WFAF107WR77 WF 107WR77 WFF 107 WR77	4P
0.17	8050	7674	0.95		
0.20	7030	6767	1.10		
0.22	6090	5954	1.25		
0.25	5310	5223	1.45		
0.26	4860	4567	1.60		
0.37	3660	3521	2.1		
0.43	2170	3037	2.4		
0.48	2880	3756	2.7		
0.56	2470	2369	3.1		
0.64	2160	2068	3.6		
0.30	4660	4333	0.90	WFA 97WR57 WFAF97WR57 WF 97WR57 WFF 97WR57	4P
0.34	4260	3906	1.00		
0.39	3670	3352	1.15		
0.45	3100	2907	1.40		
0.52	2790	2553	1.55		
0.59	2450	2245	1.75		
0.67	2130	1970	2.0		
0.77	1890	1722	2.3		
0.86	1670	1527	2.6		
0.99	1380	1327	3.1		
1.1	1280	1171	3.3		

输出转速 Output speed (r/min)	输出转矩 Output torque (N.M)	传动比 Ratio (i)	使用系数 Service factor (f_B)	机型号 Type	电机级数 Motor pole
0.18KW					
0.46	3160	2881	0.95	WFA 87WR57 WFAF87WR57 WF 87WR57 WFF 87WR57	4P
0.51	2820	2576	1.05		
0.60	2400	2199	1.25		
0.68	2080	1930	1.45		
0.77	1860	1709	1.60		
0.88	1640	1493	1.85		
1.0	1350	1300	2.2		
1.1	1210	1148	2.5		
1.3	1050	1010	2.9		
1.5	940	887	3.2		
1.7	810	780	3.7		
0.76	1880	1728	0.80	WFA 77WR37 WFAF77WR37 WF 77WR37 WFF 77WR37	4P
0.86	1710	1544	0.90		
0.98	1500	1354	1.00		
1.1	1330	1200	1.15		
1.2	1170	1053	1.30		
1.5	1000	910	1.50		
1.6	860	810	1.75		
1.9	755	710	2.0		
2.2	670	615	2.2		
1.5	910	858	0.90	WFA 67WR37 WFAF67WR37 WF 67WR37 WFF 67WR37	4P
1.8	800	755	1.00		
2.1	685	641	1.20		
2.3	625	572	1.30		
2.6	540	509	1.50		
3.0	470	437	1.75		
3.4	420	384	1.95		
2.6	560	500	1.45		
2.9	510	454	1.60		
3.4	440	392	1.85		
4.0	370	333	2.2		
4.4	325	297	2.5		
5.1	285	261	2.9		
5.6	260	238	3.2		
6.6	215	200	3.8		
2.4	615	558	1.00	WFA 57WR37 WFAF57WR37 WF 57WR37 WFF 57 WR37	4P
2.6	550	506	1.10		
2.9	485	452	1.25		
3.4	415	386	1.45		
3.9	360	338	1.65		
3.1	485	426	1.25		
3.5	430	382	1.40		
4.0	370	330	1.60		
4.4	335	298	1.80		
5.0	295	262	2.0		
5.8	250	226	2.4		
6.6	215	200	2.8		
3.6	400	370	1.00	WFA 47WR17 WFAF47WR17 WF 47WR17 WFF 47 WR17	4P
4.1	365	324	1.10		
4.6	315	288	1.25		
5.3	270	249	1.50		
4.0	375	334	1.05		
4.5	330	295	1.20		
5.2	280	253	1.45		
6.1	245	217	1.60		
7.0	215	190	1.85		
7.4	200	178	2.0		
7.1	210	186	0.95	WFA 37WR17 WFAF37WR17 WF 37WR17 WFF 37 WR17	4P
7.9	188	167	1.05		
9.1	166	145	1.20		
10	146	129	1.35		

输出转速 Output speed (r/min)	输出转矩 Output torque (N.M)	传动比 Ratio (i)	使用系数 Service factor (f_B)	机型号 Type	电机级数 Motor pole
0.18KW					
3.1	555	281071	2.7	WFA 77 WFAF77 WF 77 WFF 77	6P
3.3	520	262.93	2.9		
3.8	445	225.79	3.4		
3.8	450	228.99	1.80	WFA 67 WFAF67 WF 67 WFF 67	6P
4.4	385	195.39	2.1		
5.1	340	170.85	2.4		
5.8	300	228.99	2.8	WFA 67 WFAF67 WF 67 WFF 67	4P
6.8	255	195.39	3.2		
7.7	225	170.85	3.7		
4.4	395	199.70	1.50	WFA 57 WFAF57 WF 57 WFF 57	6P
4.7	365	183.60	1.65		
5.5	310	157.09	1.95		
6.4	270	136.16	2.2		
6.8	250	127.27	2.4		
7.9	215	110.01	2.8		
6.6	260	199.70	2.3	WFA 57 WFAF57 WF 57 WFF 57	4P
7.2	240	183.60	2.5		
8.4	205	157.09	2.9		
9.7	177	136.16	3.4		
10	166	127.27	3.6		
4.6	375	190.79	1.05	WFA 47 WFAF47 WF 47 WFF 47	6P
5.0	345	175.38	1.15		
5.8	295	150.06	1.35		
6.7	255	130.07	1.55		
7.2	240	121.57	1.65		
6.9	250	190.76	1.60	WFA 47 WFAF47 WF 47 WFF 47	4P
7.5	230	175.38	1.75		
8.8	195	150.06	2.0		
10	169	130.07	2.4		
11	158	121.57	2.5		
7.4	235	117.88	0.85	WFA 37 WFAF37 WF 37 WFF 37	6P
8.7	198	100.36	1.00		
10	171	86.53	1.15		
11	159	80.65	1.25		
12	139	70.50	1.45		
10	167	128.51	1.20	WFA 37 WFAF37 WF 37 WFF 37	4P
11	154	117.88	1.30		
13	131	100.36	1.55		
15	113	86.53	1.75		
16	105	80.65	1.90		
19	92	70.50	2.2		
20	86	66.09	2.3		
23	76	58.32	2.6		
24	71	54.54	2.8		
26	67	51.70	3.0		
28	61	47.02	3.3		
30	57	43.83	3.5		
34	50	38.31	4.0		
37	47	35.91	4.3		
42	41	31.69	4.8		
47	37	28.09	5.5		
55	31	23.88	6.4		
56	31	23.63	6.5		
64	27	20.57	7.5		
69	25	19.27	8.0		
78	22	17.03	9.0		
83	21	15.81	9.7		
92	19	14.33	11		

输出转速 Output speed (r/min)	输出转矩 Output torque (N.M)	传动比 Ratio (i)	使用系数 Service factor (f_B)	机型号 Type	电机级数 Motor pole
0.18KW					
103	17	12.87	12	WFA 37 WFAF37 WF 37 WFF 37	4P
119	14	11.08	13		
127	14	10.42	14		
147	12	8.97	15		
178	9.7	7.44	15		
196	8.8	6.74	16		
218	7.9	6.05	17		
253	6.8	5.21	18		
269	6.4	4.90	19		
313	5.5	4.22	20		
0.25KW					
0.15	13300	8831	0.90	WFA 127WR77 WFAF127WR77 WF 127WR77 WFF 127 WR77	4P
0.17	11500	7643	1.05		
0.19	10400	6715	1.15		
0.22	9190	5925	1.30		
0.25	7860	5153	1.55		
0.29	6850	4533	1.75		
0.22	9000	5954	0.85	WFA 107WR77 WFAF107WR77 WF 107WR77 WFF 107 WR77	4P
0.25	7860	5223	1.00		
0.28	7090	4567	1.10		
0.37	5370	3521	1.45		
0.43	4680	3037	1.65		
0.47	4240	2756	1.80		
0.55	3650	2369	2.1		
0.63	3180	2068	2.4		
0.81	2440	1597	3.2		
0.93	2110	1401	3.6		
0.45	4530	2907	0.95	WFA 97WR57 WFAF97WR57 WF 97WR57 WFF 97WR57	4P
0.51	4050	2553	1.05		
0.58	3560	2245	1.20		
0.66	3100	1970	1.40		
0.75	2740	1722	1.55		
0.85	2430	1527	1.75		
0.98	2040	1327	2.1		
1.1	1860	1171	2.3		
1.3	1630	1022	2.6		
0.67	3040	1930	1.00	WFA 87WR57 WFAF87WR57 WF 87WR57 WFF 87WR57	4P
0.76	2710	1709	1.10		
0.87	2380	1493	1.25		
1.0	1990	1300	1.50		
1.1	1780	1148	1.70		
1.3	1550	1010	1.95		
1.5	1370	887	2.2		
1.7	1200	780	2.5		
1.9	1020	674	2.9		
1.2	1690	1053	0.90	WFA 77WR37 WFAF77WR37 WF 77WR37 WFF 77WR37	4P
1.4	1450	910	1.05		
1.6	1260	810	1.20		
1.8	1110	710	1.35		
2.1	970	615	1.55		
2.4	850	538	1.75		
2.7	760	480	2.0		
3.2	645	413	2.3		
2.0	1000	641	0.80	WFA 67WR37 WFAF67WR37 WF 67WR37 WFF 67WR37	4P
2.3	910	572	0.90		
2.6	795	509	1.05		
3.0	685	437	1.20		
2.6	810	500	1.00		
2.9	740	454	1.10		
3.3	635	392	1.30		
3.9	535	333	1.55		
4.4	475	297	1.70		
5.0	420	261	1.95		
5.5	375	238	2.2		

输出转速 Output speed (r/min)	输出转矩 Output torque (N.M)	传动比 Ratio (i)	使用系数 Service factor (f_B)	机型号 Type	电机级数 Motor pole
0.25KW					
3.4	605	386	1.00	WFA 57WR37 WFAF57WR37 WF 57WR37 WFF 57 WR37	4P
3.8	525	338	1.15		
5.1	400	255	1.50		
3.4	625	382	0.95		
3.9	535	330	1.10		
4.4	485	298	1.25		
5.0	425	262	1.40		
5.8	360	226	1.65		
6.5	320	200	1.90		
7.7	270	170	2.2		
5.2	395	249	1.00	WFA 47WR17 WFAF47WR17 WF 47WR17 WFF 47 WR17	4P
6.0	350	218	1.15		
6.7	305	193	1.30		
7.4	280	175	1.45		
5.1	405	253	1.00		
6.0	355	217	1.10		
6.8	310	190	1.30		
7.3	290	178	1.40		
8.7	240	149	1.65		
9.9	210	131	1.90		
8.9	240	145	0.85	WFA 37WR17 WFAF37WR17 WF 37WR17 WFF 37 WR17	4P
10	210	129	0.95		
11	193	118	1.05		
13	160	98	1.25		
15	140	87	1.45		
3.1	765	281.71	1.95	WFA 77 WFAF77 WF 77 WFF 77	6P
3.3	715	262.93	2.1		
3.9	615	225.79	2.5		
4.4	540	198.31	2.8		
4.7	510	188.40	2.9		
3.8	620	228.99	1.30	WFA 67 WFAF67 WF 67 WFF 67	6P
4.5	530	195.39	1.55		
5.2	465	170.85	1.75		
5.4	440	162.31	1.85		
6.2	385	142.40	2.1		
5.7	420	228.99	1.95	WFA 67 WFAF67 WF 67 WFF 67	4P
6.7	360	195.39	2.3		
7.6	315	170.85	2.6		
8.0	300	162.31	2.8		
9.1	260	142.40	3.1		
4.4	540	199.70	1.10	WFA 57 WFAF57 WF 57 WFF 57	6P
4.8	500	183.60	1.20		
5.6	425	157.09	1.40		
6.5	370	136.16	1.60		
6.9	345	127.27	1.75		
8.0	300	110.01	2.0		
6.5	365	199.70	1.65	WFA 57 WFAF57 WF 57 WFF 57	4P
7.1	335	183.60	1.80		
8.3	290	157.09	2.1		
9.6	250	136.16	2.4		
10	235	127.27	2.6		
12	200	110.01	3.0		
5.9	405	150.06	1.00	WFA 47 WFAF47 WF 47 WFF 47	6P
6.8	355	130.07	1.15		
7.2	330	121.57	1.20		
8.4	285	105.09	1.40		
6.8	350	190.76	1.15	WFA 47 WFAF47 WF 47 WFF 47	4P
7.4	320	175.38	1.25		
8.7	275	150.06	1.45		
10	240	130.07	1.65		

输出转速 Output speed (r/min)	输出转矩 Output torque (N.M)	传动比 Ratio (i)	使用系数 Service factor (f_B)	机型号 Type	电机级数 Motor pole
0.25KW					
11	225	121.57	1.80	WFA 47 WFAF47 WF 47 WFF 47	4P
12	193	105.09	2.1		
15	164	89.29	2.4		
10	235	128.51	0.85	WFA 37 WFAF37 WF 37 WFF 37	4P
11	215	117.88	0.90		
13	184	100.36	1.10		
15	159	86.53	1.25		
16	148	80.65	1.35		
18	130	70.50	1.55		
20	121	66.09	1.65		
22	107	58.32	1.85		
24	100	54.54	2.0		
25	95	51.70	2.1		
28	86	47.02	2.3		
30	81	43.83	2.5		
34	70	38.31	2.8		
36	66	35.91	3.0		
41	58	31.69	3.4		
46	52	28.09	3.9		
54	44	23.88	4.6		
55	43	23.63	4.6		
63	38	20.57	5.3		
67	35	19.27	5.7		
76	31	17.03	6.4		
82	29	15.81	6.9		
91	26	14.33	7.6		
101	24	12.87	8.5		
117	20	11.08	9.3		
125	19	10.42	9.7		
145	17	8.97	11		
175	14	7.44	11		
193	12	6.74	11		
215	11	6.05	12		
249	9.6	5.21	13		
265	9.0	4.90	13		
308	7.7	4.22	14		
0.37KW					
0.21	14900	6715	0.80	WFA 127WR77 WFAF127WR77 WF 127WR77 WFF 127 WR77	4P
0.23	13100	5925	0.90		
0.27	11300	5153	1.05		
0.30	9850	4533	1.20		
0.35	8590	3926	1.40		
0.40	7510	3454	1.60		
0.46	6570	3031	1.85		
0.45	6720	3037	1.15	WFA 107WR77 WFAF107WR77 WF 107WR77 WFF 107 WR77	4P
0.50	6090	2756	1.25		
0.58	5240	2369	1.45		
0.67	4570	2068	1.70		
0.86	3510	1597	2.2		
0.61	5070	2245	0.85	WFA 97WR57 WFAF97WR57 WF 97WR57 WFF 97WR57	4P
0.70	4430	1970	0.95		
0.80	3900	1722	1.10		
0.90	3460	1527	1.25		
1.0	2930	1327	1.45		
1.2	2650	1171	1.60		
1.4	2310	1022	1.85		
1.5	1960	898	2.2		
1.1	2870	1300	1.05	WFA 87WR57 WFAF87WR57 WF 87WR57 WFF 87WR57	4P
1.2	2550	1148	1.20		
1.4	2230	1010	1.35		
1.6	1970	887	1.50		
1.8	1720	780	1.75		

输出转速 Output speed (r/min)	输出转矩 Output torque (N.M)	传动比 Ratio (i)	使用系数 Service factor (f_B)	机型号 Type	电机级数 Motor pole
0.37KW					
2.0	1470	674	2.0	WFA 87WR57	4P
2.3	1340	609	2.2	WFAF87WR57	
2.7	1130	515	2.7	WF 87WR57	
3.0	1000	452	3.0	WFF 87WR57	
1.7	1810	810	0.85	WFA 77WR37	4P
1.9	1590	710	0.95	WFAF77WR37	
2.2	1390	615	1.10	WF 77WR37	
2.6	1210	538	1.25	WFF 77WR37	
2.9	1080	480	1.40		
3.3	920	413	1.65		
3.8	830	367	1.80		
4.3	730	323	2.0		
3.2	980	437	0.85	WFA 67WR37	4P
3.6	870	384	0.95	WFAF67WR37	
4.1	770	338	1.05	WF 67WR37	
4.5	685	305	1.20	WFF 67WR37	
5.4	575	257	1.40		
6.0	510	231	1.60		
5.4	570	255	1.05	WFA 57WR37	4P
6.9	445	201	1.35	WFAF57WR37	
7.6	405	181	1.50	WF 57WR37	
5.3	605	262	1.00	WFF 57 WR37	
6.1	515	226	1.15		
6.9	455	200	1.30		
8.1	385	170	1.55		
9.1	345	152	1.75		
10	300	134	2.0		
7.9	395	175	1.00	WFA 47WR17	4P
9.4	335	147	1.20	WFAF47WR17	
11	295	130	1.35	WF 47WR17	
				WFF 47 WR17	
2.5	1410	270.68	2.1	WFA 87	8P
2.7	1330	255.37	2.3	WFAF87	
3.0	1190	228.93	2.5	WF 87	
3.5	1020	197.20	2.9	WFF 87	
3.3	1060	270.68	2.8	WFA 87	6P
3.5	1000	255.37	3.0	WFAF87	
3.9	900	228.93	3.3	WF 87	
				WFF 87	
4.0	890	225.79	1.70	WFA 77	6P
4.5	780	198.31	1.95	WFAF77	
4.8	740	188.40	2.0	WF 77	
5.4	655	166.47	2.3	WFF 77	
6.3	560	142.27	2.7		
4.9	720	281.71	2.1	WFA 77	4P
5.2	675	262.93	2.2	WFAF77	
6.1	580	225.79	2.6	WF 77	
7.0	510	198.31	3.0	WFF 77	
4.6	765	195.39	1.05	WFA 67	6P
5.3	670	170.85	1.20	WFAF67	
5.6	635	162.31	1.30	WF 67	
6.3	560	142.40	1.45	WFF 67	
7.4	475	120.79	1.75		
6.0	585	228.99	1.40	WFA 67	4P
7.1	500	195.39	1.65	WFAF67	
8.1	435	170.85	1.85	WF 67	
8.5	415	162.31	1.95	WFF 67	
9.7	365	142.40	2.2		
11	310	120.79	2.7		

输出转速 Output speed (r/min)	输出转矩 Output torque (N.M)	传动比 Ratio (i)	使用系数 Service factor (f_B)	机型号 Type	电机级数 Motor pole
0.37KW					
5.7	615	157.09	0.95	WFA 57	6P
6.6	535	136.16	1.10	WFAF57	
7.1	500	127.27	1.20	WF 57	
8.2	430	110.01	1.40	WFF 57	
6.9	510	199.70	1.15	WFA 57	4P
7.5	470	183.60	1.30	WFAF57	
8.8	400	157.09	1.50	WF 57	
10	350	136.16	1.70	WFF 57	
11	325	127.27	1.85		
13	280	110.01	2.1		
15	240	93.47	2.5		
17	215	83.46	2.8		
9.2	385	150.06	1.05	WFA 47	4P
11	335	130.07	1.20	WFAF47	
13	270	105.09	1.50	WF 47	
15	230	89.29	1.75	WFF 47	
17	205	79.72	1.95		
20	174	68.09	2.3		
21	167	65.36	2.4		
16	220	86.53	0.90	WFA 37	4P
17	205	80.65	0.95	WFAF37	
20	181	70.50	1.10	WF 37	
21	169	66.09	1.20	WFF 37	
24	149	58.32	1.35		
25	140	54.54	1.45		
27	132	51.70	1.50		
29	120	47.02	1.65		
31	112	43.83	1.80		
36	98	38.31	2.0		
38	92	35.91	2.2		
44	81	31.69	2.5		
49	72	28.09	2.8		
58	61	23.88	3.3		
58	61	23.63	3.3		
67	53	20.57	3.8		
72	49	19.27	4.1		
81	44	17.03	4.6		
87	41	15.81	4.9		
96	37	14.33	5.4		
107	33	12.87	6.1		
125	28	11.08	6.7		
132	27	10.42	6.9		
154	23	8.97	7.6		
186	19	7.44	7.6		
205	17	6.74	8.1		
228	16	6.05	8.7		
265	13	5.21	9.4		
282	13	4.90	9.6		
327	11	4.22	10		
0.55KW					
0.22	20500	6295	0.90	WFA 157WR97	4P
0.25	17400	5404	1.05	WFAF157WR97	
0.49	8930	2780	2.0	WF 157WR97	
0.56	7760	2427	2.3	WFF 157 WR97	
0.81	5520	1674	3.3		
1.0	4220	1308	4.3		
1.2	3730	1169	4.8		
0.35	13300	3926	0.90	WFA 127WR77	4P
0.39	11600	3454	1.05	WFAF127WR77	
0.45	10200	3031	1.20	WF 127WR77	
				WFF 127 WR77	

WF

输出转速 Output speed (r/min)	输出转矩 Output torque (N.M)	传动比 Ratio (i)	使用系数 Service factor (f_B)	机型号 Type	电机级数 Motor pole
0.55KW					
0.57	8100	2369	0.95	WFA 107WR77 WFAF107WR77 WF 107WR77 WFF 107 WR77	4P
0.66	7070	2068	1.10		
0.74	6110	1826	1.25		
0.85	5440	1597	1.40		
0.97	4750	1401	1.60		
1.1	4160	1243	1.85		
1.2	3700	1087	2.1		
1.4	3180	950	2.4		
1.6	2770	834	2.8		
2.1	2150	640	3.6		
1.0	4530	1327	0.95	WFA 97WR57 WFAF97WR57 WF 97WR57 WFF 97WR57	4P
1.2	4060	1171	1.05		
1.3	3550	1022	1.20		
1.5	3050	898	1.40		
1.7	2690	784	1.60		
2.0	2340	690	1.85		
2.2	2060	605	2.1		
2.6	1790	529	2.4		
2.9	1580	467	2.7		
3.4	1360	406	3.2		
3.7	1220	363	3.5		
1.5	3040	887	1.00	WFA 87WR57 WFAF87WR57 WF 87WR57 WFF 87WR57	4P
1.7	2660	780	1.15		
2.0	2290	674	1.30		
2.2	2080	609	1.45		
2.6	1750	545	1.70		
3.0	1540	452	1.95		
3.9	1160	345	2.6		
2.5	1860	538	0.80	WFA 77WR37 WFAF77WR37 WF 77WR37 WFF 77WR37	4P
2.8	1660	480	0.90		
3.3	1420	413	1.05		
3.7	1270	367	1.20		
4.2	1120	323	1.35		
5.3	890	257	0.90	WFA 67WR37 WFAF67WR37 WF 67WR37 WFF 67WR37	4P
5.9	790	231	1.05		
6.6	705	205	1.15		
7.8	600	175	1.35		
2.5	2140	276.77	2.0	WFA 97 WFAF97 WF 97 WFF 97	8P
2.7	1960	253.41	2.2		
3.0	1730	223.88	2.5		
2.5	2090	270.68	1.45	WFA 87 WFAF87 WF 87 WFF 87	8P
2.7	1970	255.37	1.50		
3.0	1770	228.93	1.70		
3.5	1520	197.20	1.95		
3.3	1580	270.68	1.90	WFA 87 WFAF87 WF 87 WFF 87	6P
3.5	1490	255.37	2.0		
3.9	1340	228.93	2.2		
4.6	1150	197.20	2.6		
5.0	1050	179.97	2.9		
4.0	1320	225.79	1.15	WFA 77 WFAF77 WF 77 WFF 77	6P
4.5	1160	198.31	1.30		
4.8	1100	188.40	1.35		
5.4	970	166.47	1.55		
6.3	830	142.27	1.80		
6.9	760	130.42	1.95		
6.0	870	225.79	1.70	WFA 77 WFAF77 WF 77 WFF 77	4P
6.9	765	198.31	1.95		
7.2	730	188.40	2.1		
8.2	645	166.47	2.3		

输出转速 Output speed (r/min)	输出转矩 Output torque (N.M)	传动比 Ratio (i)	使用系数 Service factor (f_B)	机型号 Type	电机级数 Motor pole
0.55KW					
9.6	550	142.27	2.7	WFA 77 WFAF77 WF 77 WFF 77	4P
10	505	130.42	3.0		
12	440	114.45	3.4		
13	420	108.46	3.6		
14	365	94.93	4.1		
7.0	755	195.39	1.10	WFA 67 WFAF67 WF 67 WFF 67	4P
8.0	660	170.85	1.25		
8.4	625	162.31	1.30		
9.6	550	142.40	1.50		
11	465	120.79	1.75		
12	420	109.04	1.95		
14	370	95.94	2.2		
15	350	90.59	2.3		
17	310	79.76	2.7		
8.7	605	157.09	1.00	WFA 57 WFAF57 WF 57 WFF 57	4P
10	525	136.16	1.15		
11	490	127.27	1.20		
12	425	110.01	1.40		
15	360	93.47	1.65		
16	320	83.46	1.85		
19	280	72.98	2.1		
20	265	68.22	2.3		
23	230	58.97	2.6		
13	405	105.09	1.00	WFA 47 WFAF47 WF 47 WFF 47	4P
15	345	89.29	1.15		
17	310	79.72	1.30		
20	265	68.09	1.50		
21	250	65.36	1.60		
24	220	56.49	1.85		
28	185	48.00	2.2		
32	166	42.86	2.4		
23	225	58.32	0.90	WFA 37 WFAF37 WF 37 WFF 37	4P
25	210	54.54	0.95		
26	200	51.70	1.00		
29	182	47.02	1.10		
31	169	43.83	1.20		
36	148	38.31	1.35		
38	139	35.91	1.45		
43	122	31.69	1.65		
48	109	28.09	1.85		
57	92	23.68	2.2		
58	91	23.63	2.2		
66	79	20.57	2.5		
71	74	19.27	2.7		
80	66	17.03	3.0		
95	55	14.33	3.6		
106	50	12.87	4.0		
123	43	11.08	4.4		
130	40	10.42	4.6		
152	35	8.97	5.1		
170	31	8.01	5.5		
183	29	7.44	5.1		
202	26	6.74	5.4		
225	23	6.05	5.8		
261	20	5.21	6.2		
277	19	4.90	6.3		
322	16	4.22	6.8		
361	15	3.77	7.2		
0.75KW					
0.50	12300	2780	1.45	WFA 157WR97 WFAF157WR97 WF 157WR97 WFF 157 WR97	4P
0.57	10700	2427	1.70		
0.82	7580	1674	2.4		
1.1	5830	1308	3.1		
1.2	5170	1169	3.5		

输出转速 Output speed (r/min)	输出转矩 Output torque (N.M)	传动比 Ratio (i)	使用系数 Service factor (f_B)	机型号 Type	电机级数 Motor pole
0.75KW					
0.46	13800	3031	0.85	WFA 127WR77 WFAF127WR77 WF 127WR77 WFF 127 WR77	4P
0.52	12400	2672	0.95		
0.59	10900	2357	1.10		
0.68	9390	2038	1.30		
0.77	8190	1784	1.45		
0.86	7350	1606	1.65		
0.76	8360	1826	0.90	WFA 107WR77 WFAF107WR77 WF 107WR77 WFF 107 WR77	4P
0.86	7400	1597	1.05		
0.98	6470	1401	1.20		
1.1	5690	1243	1.35		
1.3	5040	1087	1.50		
1.5	4350	950	1.75		
1.7	3800	834	2.0		
2.2	2940	640	2.6		
3.2	2000	436	3.8		
1.4	4810	1022	0.90	WFA 97WR57 WFAF97WR57 WF 97WR57 WFF 97WR57	4P
1.5	4150	898	1.05		
1.8	3660	784	1.20		
2.0	3190	690	1.35		
2.3	2800	605	1.55		
2.6	2440	529	1.75		
3.0	2160	467	2.0		
3.4	1860	406	2.3		
3.8	1670	363	2.6		
2.0	3120	674	0.95	WFA 87WR57 WFAF87WR57 WF 87WR57 WFF 87WR57	4P
2.3	2830	609	1.05		
2.7	2390	515	1.25		
3.0	2100	452	1.45		
4.0	1590	345	1.90		
3.8	1720	367	0.85	WFA 77WR37 WFAF77WR37 WF 77WR37 WFF 77WR37	4P
4.3	1520	323	1.00		
4.9	1310	280	1.15		
2.7	2640	254.40	2.9	WFA 107 WFAF107 WF 107 WFF 107	4P
2.5	2870	276.77	1.50	WFA 97 WFAF97 WF 97 WFF 97	8P
2.7	2630	263.41	1.65		
3.1	2320	223.88	1.85		
3.2	2200	276.77	1.95	WFA 97 WFAF97 WF 97 WFF 97	6P
3.5	2020	253.41	2.1		
4.0	1780	223.88	2.4		
3.3	2150	270.68	1.40	WFA 87 WFAF87 WF 87 WFF 87	6P
3.5	2030	255.37	1.50		
3.9	1820	228.93	1.65		
4.6	1570	197.20	1.90		
5.0	1430	179.97	2.1		
5.6	1270	159.61	2.4		
5.1	1400	270.68	2.1	WFA 87 WFAF87 WF 87 WFF 87	4P
5.4	1330	255.37	2.3		
6.0	1190	228.93	2.5		
4.5	1580	198.31	0.95	WFA 77 WFAF77 WF 77 WFF 77	6P
4.8	1500	188.40	1.00		
5.4	1320	166.47	1.15		
6.3	1130	142.27	1.30		
6.9	1040	130.42	1.45		

输出转速 Output speed (r/min)	输出转矩 Output torque (N.M)	传动比 Ratio (i)	使用系数 Service factor (f_B)	机型号 Type	电机级数 Motor pole
0.75KW					
6.1	1170	225.79	1.30	WFA 77 WFAF77 WF 77 WFF 77	4P
7.0	1030	198.31	1.45		
7.3	980	188.40	1.55		
8.3	860	166.47	1.75		
9.7	740	142.27	2.0		
11	675	130.42	2.2		
12	595	114.45	2.5		
13	565	108.46	2.7		
8.1	890	170.85	0.90	WFA 67 WFAF67 WF 67 WFF 67	4P
8.5	840	162.31	0.95		
9.7	740	142.40	1.10		
11	625	120.79	1.30		
13	565	109.04	1.45		
14	500	95.94	1.65		
15	470	90.59	1.75		
17	415	79.76	2.0		
20	350	67.65	2.3		
23	315	61.07	2.6		
11	660	127.27	0.90	WFA 57 WFAF57 WF 57 WFF 57	4P
13	570	110.01	1.05		
15	485	93.47	1.25		
17	435	83.46	1.40		
19	380	72.98	1.60		
20	355	68.22	1.70		
23	305	58.97	1.95		
28	260	50.10	2.3		
31	230	44.73	2.6		
17	415	79.72	0.95	WFA 47 WFAF47 WF 47 WFF 47	4P
20	355	68.09	1.15		
21	340	65.36	1.20		
24	295	56.49	1.35		
29	250	48.00	1.60		
32	220	42.86	1.80		
38	190	36.61	2.1		
40	178	34.29	2.2		
48	150	28.88	2.7		
29	145	47.02	0.80	WFA 37 WFAF37 WF 37 WFF 37	4P
31	230	43.83	0.90		
36	199	38.31	1.00		
38	186	35.91	1.05		
44	165	31.69	1.20		
49	146	28.09	1.35		
58	124	23.88	1.60		
58	123	23.63	1.65		
67	107	20.57	1.85		
72	100	19.27	2.0		
81	88	17.03	2.3		
96	74	14.33	2.7		
107	67	12.87	3.0		
125	58	11.08	3.3		
132	54	10.42	3.4		
154	47	8.97	3.8		
205	35	6.74	4.0		
228	31	6.05	4.3		
265	27	5.21	4.6		
282	25	4.90	4.7		
327	22	4.22	5.0		
366	20	3.77	5.4		
1.1KW					
0.50	18200	2780	1.00	WFA 157WR97 WFAF157WR97 WF 157WR97 WFF 157 WR97	4P
0.58	16000	2427	1.15		
0.64	14300	2185	1.25		
0.72	12700	1944	1.40		
0.84	11200	1674	1.60		

WF

输出转速 Output speed (r/min)	输出转矩 Output torque (N.M)	传动比 Ratio (i)	使用系数 Service factor (f_B)	机型号 Type	电机级数 Motor pole
1.1KW					
1.1	8640	1308	2.1	WFA 157WR97 WFAF157WR97 WF 157WR97 WFF 157 WR97	4P
1.2	7680	1169	2.3		
1.5	6190	953	2.9		
1.7	5450	845	3.3		
3.1	2880	446	6.2		
4.6	1950	302	9.2		
0.69	13800	2038	0.85	WFA 127WR77 WFAF127WR77 WF 127WR77 WFF 127 WR77	4P
0.79	12000	1784	1.00		
0.87	10800	1606	1.10		
1.0	9350	1390	1.30		
1.1	8170	1220	1.45		
1.3	7260	1077	1.65		
1.1	8360	1243	0.90	WFA 107WR77 WFAF107WR77 WF 107WR77 WFF 107 WR77	4P
1.3	7370	1087	1.05		
1.5	6390	950	1.20		
1.7	5590	823	1.35		
1.9	4910	723	1.55		
2.2	4310	640	1.80		
2.0	4670	690	0.90	WFA 97WR57 WFAF97WR57 WF 97WR57 WFF 97WR57	4P
2.3	4100	605	1.05		
2.7	3580	529	1.20		
3.0	3160	467	1.35		
3.5	2730	406	1.55		
3.8	2450	363	1.75		
3.1	3070	452	1.00	WFA 87WR57 WFAF87WR57 WF 87WR57 WFF 87WR57	4P
4.1	2330	345	1.30		
4.7	2020	300	1.50		
5.6	1670	249	1.80		
2.7	3930	254.40	1.95	WFA 107 WFAF107 WF 107 WFF 107	8P
3.2	3330	215.37	2.3		
3.4	3080	199.31	2.5		
3.8	2760	178.64	2.8		
3.3	3160	276.77	1.35	WFA 97 WFAF97 WF 97 WFF 97	6P
3.6	2890	253.41	1.50		
4.1	2560	223.88	1.70		
4.8	2170	189.92	2.0		
5.3	2000	174.87	2.2		
5.1	2080	276.77	2.1	WFA 97 WFAF97 WF 97 WFF 97	4P
5.5	1900	253.41	2.3		
6.2	1680	223.88	2.6		
3.4	3090	270.68	0.95	WFA 87 WFAF87 WF 87 WFF 87	6P
3.6	2920	255.37	1.05		
4.0	2610	228.93	1.15		
4.7	2250	197.20	1.35		
5.1	2050	179.97	1.45		
5.8	1820	159.61	1.65		
5.2	2030	270.68	1.50	WFA 87 WFAF87 WF 87 WFF 87	4P
5.5	1920	255.37	1.55		
6.1	1720	228.93	1.75		
7.1	1480	197.20	2.0		
7.8	1350	179.97	2.2		
8.8	1200	159.61	2.5		
10	1010	134.16	3.0		
11	930	123.29	3.2		
7.1	1490	198.31	1.00		
7.4	1410	188.40	1.05		
8.4	1250	166.47	1.20		
9.8	1070	142.27	1.40		

输出转速 Output speed (r/min)	输出转矩 Output torque (N.M)	传动比 Ratio (i)	使用系数 Service factor (f_B)	机型号 Type	电机级数 Motor pole
1.1KW					
11	980	130.42	1.55	WFA 77 WFAF77 WF 77 WFF 77	4P
12	850	114.45	1.75		
13	810	108.46	1.85		
15	710	94.93	2.1		
16	640	85.52	2.3		
19	565	75.02	2.7		
12	910	120.79	0.90	WFA 67 WFAF67 WF 67 WFF 67	4P
13	820	109.04	1.00		
15	720	95.94	1.15		
15	680	90.59	1.20		
18	600	79.76	1.35		
21	510	67.65	1.60		
23	460	61.07	1.80		
26	105	53.73	2.0		
28	380	50.74	2.2		
32	325	43.20	2.5		
36	395	39.23	2.7		
41	255	34.01	2.9		
17	625	83.46	0.95	WFA 57 WFAF57 WF 57 WFF 57	4P
19	550	72.98	1.10		
21	510	68.22	1.15		
24	440	58.97	1.35		
28	375	50.10	1.60		
31	335	44.73	1.80		
37	285	38.21	2.1		
39	270	35.79	2.2		
46	225	30.15	2.6		
25	425	56.49	0.95	WFA 47 WFAF47 WF 47 WFF 47	4P
29	360	48.00	1.10		
33	320	42.86	1.25		
38	275	36.61	1.45		
41	255	34.29	1.55		
48	215	28.88	1.85		
45	230	30.86	1.75		
48	220	29.32	1.80		
54	193	25.72	2.1		
64	164	21.82	2.4		
71	148	19.70	2.7		
44	240	31.69	0.85	WFA 37 WFAF37 WF 37 WFF 37	4P
50	210	28.09	0.95		
59	179	23.88	1.10		
68	154	20.57	1.30		
73	145	19.27	1.40		
82	128	17.03	1.55		
98	108	14.33	1.85		
109	97	12.87	2.1		
126	83	11.08	2.3		
134	78	10.42	2.4		
156	67	8.97	2.6		
175	60	8.01	2.8		
208	51	6.74	2.8		
231	45	6.05	3.0		
269	39	5.21	3.2		
286	37	4.90	3.3		
332	32	4.22	3.5		
372	28	3.77	3.7		
1.5KW					
0.58	21900	2427	0.80	WFA 157WR97 WFAF157WR97 WF 157WR97 WFF 157 WR97	4P
0.65	19700	2185	0.90		
0.73	17500	1944	1.05		
0.84	15300	1674	1.20		
1.1	11900	1308	1.50		
1.2	10600	1169	1.70		

输出转速 Output speed (r/min)	输出转矩 Output torque (N.M)	传动比 Ratio (i)	使用系数 Service factor (f_B)	机型号 Type	电机级数 Motor pole
1.5KW					
1.5	8540	953	2.1	WFA 157WR97	4P
1.7	7530	845	2.4	WFAF157WR97	
3.2	3980	446	4.5	WF 157WR97	
4.7	2690	302	6.7	WFF 157 WR97	
0.88	14800	1606	0.80	WFA 127WR77	4P
1.0	12800	1390	0.95	WFAF127WR77	
1.2	11200	1220	1.05	WF 127WR77	
1.3	9910	1077	1.20	WFF 127 WR77	
1.5	8520	930	1.40		
1.7	7500	820	1.60		
1.9	6630	727	1.80		
2.2	5960	648	2.0		
1.5	8730	950	0.90	WFA 107WR77	4P
1.7	7640	834	1.00	WFAF107WR77	
1.9	6730	736	1.15	WF 107WR77	
2.2	5890	640	1.30	WFF 107 WR77	
2.5	5110	560	1.50		
2.9	4460	489	1.70		
3.2	4010	436	1.90		
3.8	3400	370	2.3		
2.7	4880	529	0.90	WFA 97WR57	4P
3.0	4310	467	1.00	WFAF97WR57	
3.5	3730	406	1.15	WF 97WR57	
3.9	3340	363	1.30	WFF 97WR57	
4.1	3180	345	0.95	WFA 87WR57	4P
4.7	2760	300	1.10	WFAF87WR57	
5.7	2290	249	1.30	WF 87WR57	
				WFF 87WR57	
2.8	5210	254.40	1.50	WFA 107	8P
3.2	4410	215.37	1.75	WFAF107	
3.5	4080	199.31	1.90	WF 107	
3.9	3660	178.64	2.1	WFF 107	
3.6	3960	254.40	1.95	WFA 107	6P
4.3	3350	215.37	2.3	WFAF107	
4.6	3100	199.31	2.5	WF 107	
5.2	2780	178.64	2.8	WFF 107	
3.3	4310	276.77	1.00	WFA 97	6P
3.6	3950	253.41	1.10	WFAF97	
4.1	3490	223.88	1.25	WF 97	
4.8	2960	189.92	1.45	WFF 97	
5.3	2720	174.87	1.60		
5.1	2810	276.77	1.55	WFA 97	4P
5.6	2570	253.41	1.65	WFAF97	
6.3	2270	223.88	1.90	WF 97	
7.4	1930	189.92	2.2	WFF 97	
8.1	1780	174.87	2.4		
5.2	2750	270.68	1.10	WFA 87	4P
5.5	2590	255.37	1.15	WFAF87	
6.2	2330	228.93	1.30	WF 87	
7.2	2000	197.20	1.50	WFF 87	
7.8	1830	179.97	1.65		
8.8	1620	159.61	1.85		
11	1360	134.16	2.2		
13	1110	109.49	2.7		
14	990	97.89	3.0		
8.5	1690	166.47	0.90	WFA 77	4P
9.9	1450	142.27	1.05	WFAF77	
11	1320	130.42	1.15	WF 77	
12	1160	114.45	1.30	WFF 77	

输出转速 Output speed (r/min)	输出转矩 Output torque (N.M)	传动比 Ratio (i)	使用系数 Service factor (f_B)	机型号 Type	电机级数 Motor pole
1.5KW					
13	1100	108.46	1.35	WFA 77	4P
15	960	94.93	1.55	WFAF77	
16	870	85.52	1.75	WF 77	
19	760	75.02	1.95	WFF 77	
19	735	72.50	2.0		
21	675	66.46	2.2		
24	595	58.32	2.5		
26	560	55.27	2.7		
29	490	48.37	3.0		
32	445	43.58	3.4		
37	390	38.23	3.9		
39	370	36.58	3.0		
45	320	31.51	4.3		
16	920	90.59	0.90	WFA 67	4P
18	810	79.76	1.00	WFAF67	
21	685	67.65	1.20	WF 67	
23	620	61.07	1.30	WFF 67	
26	545	53.73	1.50		
28	515	50.74	1.60		
33	440	43.20	1.85		
36	400	39.26	1.95		
39	370	36.30	2.2		
44	325	32.08	2.5		
51	280	27.41	2.9		
56	255	25.13	3.2		
24	600	58.97	1.00	WFA 57	4P
28	510	50.10	1.20	WFAF57	
32	455	44.73	1.30	WF 57	
37	390	39.21	1.55	WFF 57	
39	365	35.79	1.65		
47	305	30.15	1.95		
33	435	42.86	0.90	WFA 47	4P
39	370	36.61	1.10	WFAF47	
41	350	34.29	1.15	WF 47	
49	295	28.88	1.35	WFF 47	
46	315	30.86	1.30		
48	300	29.32	1.35		
55	260	25.72	1.55		
65	220	21.82	1.80		
72	200	19.70	2.0		
81	176	17.33	2.3		
86	166	16.36	2.4		
101	142	13.93	2.8		
69	210	20.57	0.95	WFA 37	4P
73	196	19.27	1.00	WFAF37	
83	173	17.03	1.15	WF 37	
98	146	14.33	1.35	WFF 37	
110	131	12.87	1.55		
127	113	11.08	1.70		
135	106	10.42	1.75		
157	91	8.97	1.90		
176	81	8.01	2.1		
209	69	6.74	2.0		
233	62	6.05	2.2		
271	53	5.21	2.4		
288	50	4.90	2.4		
334	43	4.22	2.6		
374	38	3.77	2.7		

输出转速 Output speed (r/min)	输出转矩 Output torque (N.M)	传动比 Ratio (i)	使用系数 Service factor (f_B)	机型号 Type	电机级数 Motor pole
2.2KW					
0.98	18900	1441	0.95	WFA 157WR97 WFAF157WR97 WF 157WR97 WFF 157 WR97	4P
1.1	17600	1308	1.00		
1.2	15700	1169	1.15		
1.5	12700	953	1.40		
1.7	11200	845	1.60		
1.9	10100	764	1.80		
2.1	9020	680	2.0		
2.5	7610	576	2.4		
3.2	5940	446	3.0		
4.7	4020	302	4.5		
5.2	3630	273	5.0		
6.1	3060	232	5.9		
7.2	2590	197	6.9		
1.3	14600	1077	0.80	WFA 127WR77 WFAF127WR77 WF 127WR77 WFF 127 WR77	4P
1.5	12600	930	0.95		
1.7	11100	820	1.10		
1.9	9830	727	1.20		
2.2	8810	648	1.35		
2.6	7460	549	1.60		
2.8	6720	495	1.80		
3.3	5810	428	2.1		
2.2	8700	640	1.90	WFA 107WR77 WFAF107WR77 WF 107WR77 WFF 107 WR77	4P
2.5	7580	560	1.00		
2.9	6610	489	1.15		
3.2	5930	436	1.30		
3.8	5030	370	1.55		
4.2	4520	333	1.70		
3.9	4940	363	0.85	WFA 97WR57 WFAF97WR57 WF 97WR57 WFF 97WR57	4P
4.9	3890	285	1.10		
5.8	3340	245	1.30		
2.8	7640	254.40	1.00	WFA 107 WFAF107 WF 107 WFF 107	8P
3.2	6460	215.37	1.20		
3.5	5980	199.31	1.30		
3.9	5360	178.64	1.45		
3.7	5690	254.40	1.35	WFA 107 WFAF107 WF 107 WFF 107	6P
4.4	4810	215.37	1.60		
4.7	4450	199.31	1.70		
5.3	3990	178.64	1.90		
5.5	3790	254.40	2.0	WFA 107 WFAF107 WF 107 WFF 107	4P
6.6	3210	215.37	2.4		
7.1	2970	199.31	2.6		
7.9	2660	178.64	2.9		
4.2	5000	223.88	0.85	WFA 97 WFAF97 WF 97 WFF 97	6P
5.9	4240	189.92	1.00		
5.4	3910	174.87	1.10		
6.0	3490	156.30	1.25		
5.1	4120	276.77	1.05	WFA 97 WFAF97 WF 97 WFF 97	4P
5.6	3780	253.41	1.15		
6.3	3340	223.88	1.30		
7.4	2830	189.92	1.50		
8.1	2610	174.87	1.65		
9.0	2330	156.30	1.85		
10	2100	140.71	2.0		
11	1900	127.42	2.3		
7.2	2940	197.20	1.00	WFA 87 WFAF87 WF 87 WFF 87	4P
7.8	2680	179.97	1.10		
8.8	2380	159.61	1.25		
11	2000	134.16	1.50		

输出转速 Output speed (r/min)	输出转矩 Output torque (N.M)	传动比 Ratio (i)	使用系数 Service factor (f_B)	机型号 Type	电机级数 Motor pole
2.2KW					
11	1840	123.29	1.65	WFA 87 WFAF87 WF 87 WFF 87	4P
13	1630	109.49	1.85		
14	1460	97.89	2.1		
16	1310	88.01	2.3		
18	1140	76.39	2.6		
21	1020	68.40	2.9		
25	850	56.75	3.5		
28	750	50.36	3.9		
31	675	45.28	4.2		
12	1710	114.45	0.90	WFA 77 WFAF77 WF 77 WFF 77	4P
13	1620	108.46	0.95		
15	1410	94.93	1.05		
16	1270	85.52	1.20		
19	1120	75.02	1.35		
21	990	66.46	1.50		
24	870	58.32	1.75		
26	820	55.27	1.80		
29	720	48.37	2.1		
32	650	43.58	2.3		
39	545	36.58	2.0		
45	470	31.51	2.9		
49	430	28.75	3.3		
55	380	25.50	4.0		
23	910	61.07	0.90	WFA 67 WFAF67 WF 67 WFF 67	4P
26	800	53.73	1.00		
28	755	50.74	1.10		
33	645	43.20	1.25		
36	585	39.26	1.35		
41	505	34.01	1.45		
44	480	32.08	1.70		
51	410	27.41	2.0		
56	375	25.13	2.2		
64	330	22.05	2.5		
67	310	20.90	2.6		
77	275	18.29	3.0		
32	665	44.73	0.90	WFA 57 WFAF57 WF 57 WFF 57	4P
37	570	38.21	1.05		
39	535	35.79	1.15		
47	450	30.15	1.30		
56	370	24.96	1.55		
67	315	21.17	1.90		
74	285	19.11	2.1		
84	250	16.81	2.4		
89	235	15.88	2.5		
55	385	25.72	1.05	WFA 47 WFAF47 WF 47 WFF 47	4P
65	328	21.82	1.25		
72	295	19.70	1.35		
81	260	17.33	1.55		
86	245	16.36	1.65		
101	210	13.93	1.95		
111	189	12.66	2.1		
129	163	10.97	2.5		
157	133	8.96	2.5		
98	245	14.33	0.95	WFA 37 WFAF37 WF 37 WFF 37	4P
110	192	12.87	1.05		
127	165	11.08	1.15		
135	155	10.42	1.20		
157	134	8.97	1.30		
176	119	8.01	1.40		
209	100	6.74	1.40		
233	90	6.05	1.50		
271	78	5.21	1.60		
288	73	4.90	1.65		
334	63	4.22	1.75		
374	56	3.77	1.85		

输出转速 Output speed (r/min)	输出转矩 Output torque (N.M)	传动比 Ratio (i)	使用系数 Service factor (f_B)	机型号 Type	电机级数 Motor pole
3.0KW					
1.2	21700	1169	0.85	WFA 157WR97 WFAF157WR97 WF 157WR97 WFF 157 WR97	4P
1.5	17600	953	1.00		
1.7	15600	845	1.15		
1.8	14100	764	1.30		
2.1	12500	680	1.45		
2.4	10600	576	1.70		
3.1	8250	446	2.2		
4.6	5580	302	3.2		
5.1	5040	273	3.6		
6.1	4250	232	4.2		
7.1	3610	197	5.0		
1.9	13600	727	0.90	WFA 127WR77 WFAF127WR77 WF 127WR77 WFF 127 WR77	4P
2.2	12200	648	1.00		
2.5	10300	549	1.15		
2.8	9270	495	1.30		
3.2	8170	436	0.95	WFA 107WR77 WFAF107WR77 WF 107WR77 WFF 107 WR77	4P
3.8	6930	370	1.10		
4.2	6240	333	1.25		
4.8	5460	291	1.40		
3.7	7750	254.40	1.00	WFA 107 WFAF107 WF 107 WFF 107	6P
4.4	6560	215.37	1.15		
4.7	6070	199.31	1.25		
5.3	5440	178.64	1.40		
5.5	5210	254.40	1.50	WFA 107 WFAF107 WF 107 WFF 107	4P
6.5	4410	215.37	1.75		
7.0	4080	199.31	1.90		
7.8	3660	178.64	2.1		
8.7	3300	161.28	2.3		
6.2	4580	233.88	0.95	WFA 97 WFAF97 WF 97 WFF 97	4P
7.4	3890	189.92	1.10		
8.0	3580	174.87	1.20		
9.0	3200	156.30	1.35		
9.9	2880	140.71	1.50		
11	2610	127.42	1.65		
12	2310	112.99	1.85		
14	2090	102.16	2.1		
16	1840	89.85	2.3		
10	2750	134.16	1.10	WFA 87 WFAF87 WF 87 WFF 87	4P
11	2520	123.29	1.20		
13	2240	109.49	1.35		
14	2000	97.89	1.50		
16	1800	88.01	1.65		
18	1560	76.39	1.90		
20	1400	68.40	2.1		
25	1160	56.75	2.6		
28	1030	50.36	2.8		
16	1750	85.52	0.85	WFA 77 WFAF77 WF 77 WFF 77	4P
19	1540	75.02	1.00		
21	1360	66.46	1.10		
24	1190	58.32	1.25		
25	1130	55.27	1.35		
29	990	48.37	1.50		
32	890	43.58	1.70		
37	780	38.23	1.90		
38	750	36.58	1.50		
44	645	31.51	2.1		
49	590	28.75	2.4		
55	520	25.50	2.9		
65	440	21.43	3.4		

输出转速 Output speed (r/min)	输出转矩 Output torque (N.M)	传动比 Ratio (i)	使用系数 Service factor (f_B)	机型号 Type	电机级数 Motor pole
3.0KW					
32	880	43.20	0.95	WFA 67 WFAF67 WF 67 WFF 67	4P
36	800	39.26	0.95		
41	695	34.01	1.05		
44	655	32.08	1.25		
51	560	27.41	1.45		
56	515	25.13	1.60		
63	450	22.05	1.80		
67	430	20.90	1.90		
77	375	18.29	2.2		
85	335	16.48	2.4		
97	295	14.46	2.8		
56	510	24.96	1.15	WFA 57 WFAF57 WF 57 WFF 57	4P
66	435	21.17	1.40		
73	390	19.11	1.55		
83	345	16.81	1.75		
88	325	15.88	1.75		
104	275	13.52	2.2		
114	250	12.29	2.4		
132	220	10.64	2.8		
71	405	19.70	1.00	WFA 47 WFAF47 WF 47 WFF 47	4P
81	355	17.33	1.15		
86	335	16.36	1.20		
100	285	13.93	1.40		
111	260	12.66	1.55		
128	225	10.97	1.80		
156	183	8.96	1.80		
126	225	11.08	0.85	WFA 37 WFAF37 WF 37 WFF 37	4P
134	215	10.42	0.85		
156	184	8.97	0.95		
175	164	8.01	1.05		
208	138	6.74	1.00		
231	124	6.05	1.10		
269	107	5.21	1.15		
286	100	4.90	1.20		
332	86	4.22	1.25		
372	77	3.77	1.35		
4.0KW					
1.7	20600	845	0.85	WFA 157WR97 WFAF157WR97 WF 157WR97 WFF 157 WR97	4P
1.9	18600	764	0.95		
2.1	16600	680	1.10		
2.5	14000	576	1.30		
3.2	10900	446	1.65		
4.7	7390	302	2.4		
5.2	6670	273	2.7		
6.1	5640	232	3.2		
7.2	4780	197	3.8		
2.6	13600	549	0.90	WFA 127WR77 WFAF127WR77 WF 127WR77 WFF 127 WR77	4P
2.9	12200	495	1.00		
3.3	10600	428	1.15		
3.8	9270	376	1.30		
4.3	8230	333	1.95	WFA 107WR77 WFAF107WR77 WF 107WR77 WFF 107 WR77	4P
4.9	7190	291	1.05		
5.6	6310	255	1.20		
4.2	9060	170.83	1.30	WFA 127 WFAF127 WF 127 WFF 127	4P
4.7	8150	153.67	1.45		
5.7	6650	125.37	1.80		

输出转速 Output speed (r/min)	输出转矩 Output torque (N.M)	传动比 Ratio (i)	使用系数 Service factor (f_B)	机型号 Type	电机级数 Motor pole
4.0KW					
5.6	6840	254.40	1.10	WFA 107 WFAF107 WF 107 WFF 107	4P
6.6	5790	215.37	1.35		
7.1	5360	199.31	1.45		
7.9	4810	178.64	1.60		
8.8	4340	161.28	1.75		
9.7	3940	146.49	1.95		
11	3500	129.97	2.2		
12	3170	117.94	2.4		
14	2730	101.38	2.8		
8.1	4700	174.87	0.90	WFA 97 WFAF97 WF 97 WFF 97	4P
9.1	4200	156.30	1.00		
10	3780	140.71	1.15		
11	3430	127.42	1.25		
13	3040	112.99	1.40		
14	2750	102.16	1.55		
15	2620	97.58	1.65		
16	2420	89.85	1.80		
18	2160	80.31	2.0		
20	1940	72.30	2.2		
22	1760	65.47	2.4		
13	2950	109.49	1.00	WFA 87 WFAF87 WF 87 WFF 87	4P
15	2630	97.89	1.15		
16	2370	88.01	1.25		
19	2050	76.39	1.45		
21	1840	68.40	1.65		
25	1530	56.75	1.95		
28	1350	50.36	2.2		
31	1220	45.28	2.3		
21	1790	66.46	0.85	WFA 77 WFAF77 WF 77 WFF 77	4P
24	1570	58.32	0.95		
26	1490	55.27	1.00		
29	1300	48.37	1.15		
33	1170	43.58	1.30		
37	1030	38.23	1.45		
42	910	33.74	1.65		
47	800	29.91	1.85		
56	685	25.54	2.1		
45	850	31.51	1.65		
49	775	28.75	1.85		
56	685	25.50	2.2		
66	575	21.43	2.6		
72	530	19.70	2.8		
52	735	27.41	1.10	WFA 67 WFAF67 WF 67 WFF 67	4P
57	675	25.13	1.20		
64	595	22.05	1.40		
68	560	20.90	1.45		
78	490	18.29	1.64		
86	445	16.48	1.85		
98	390	14.46	2.1		
111	345	12.76	2.4		
126	305	11.31	2.7		
147	260	9.66	3.2		
156	245	9.08	2.2		
165	230	8.60	2.5		
189	205	7.53	3.0		
209	183	6.78	3.4		
239	160	5.95	3.8		
270	141	5.25	4.2		
305	125	4.66	4.5		
357	107	3.97	4.7		

输出转速 Output speed (r/min)	输出转矩 Output torque (N.M)	传动比 Ratio (i)	使用系数 Service factor (f_B)	机型号 Type	电机级数 Motor pole
4.0KW					
67	570	21.17	1.05	WFA 57 WFAF57 WF 57 WFF 57	4P
74	515	19.11	1.15		
84	450	16.81	1.35		
89	425	15.88	1.40		
105	365	13.52	1.65		
116	330	12.29	1.80		
133	285	10.64	2.1		
153	250	9.31	1.70		
173	220	8.19	1.90		
184	210	7.73	2.0		
216	177	6.58	2.4		
237	161	5.98	2.6		
274	139	5.18	3.0		
5.5KW					
2.5	19300	576	0.95	WFA 157WR97 WFAF157WR97 WF 157WR97 WFF 157 WR97	4P
2.8	16800	503	1.05		
3.2	15000	446	1.20		
4.1	11800	353	1.55		
4.7	10100	302	1.80		
5.2	9160	273	1.95		
6.2	7750	232	2.3		
7.1	6750	202	2.7		
7.3	6570	197	2.7		
3.4	14000	418	0.85	WFA 127WR77 WFAF127WR77 WF 127WR77 WFF 127 WR77	4P
3.8	12600	374	0.95		
4.6	10500	312	1.15		
4.9	9840	293	1.20		
5.5	8680	259	1.40		
6.4	7500	223	1.60		
3.3	14500	428	0.85	WFA 127WR77 WFAF127WR77 WF 127WR77 WFF 127 WR77	4P
3.8	12700	376	0.95		
2.7	19800	267.43	0.90	WFA 157 WFAF157 WF 157 WFF 157	8P
3.3	16100	217.62	1.10		
4.0	13200	178.20	1.35		
4.4	12100	162.96	1.50		
5.0	10500	141.80	1.70		
5.7	9260	125.14	1.95		
6.5	8030	108.49	2.2		
7.4	7140	96.53	2.5		
8.4	6350	85.80	2.8		
9.1	5800	78.46	3.1		
10	5050	68.28	3.6		
4.2	12600	170.38	0.95	WFA 127 WFAF127 WF 127 WFF 127	8P
4.6	11400	153.27	1.05		
5.7	9270	125.04	1.30		
6.2	8460	114.04	1.40		
6.6	7910	215.37	0.95	WFA 107 WFAF107 WF 107 WFF 107	4P
7.2	7320	199.31	1.05		
8.0	6560	178.64	1.15		
8.9	5920	161.28	1.30		
9.8	5380	146.49	1.45		
11	4770	129.97	1.60		
12	4330	117.94	1.75		
14	3720	101.38	2.1		
15	3400	92.47	2.3		
16	3250	88.49	2.4		
17	3080	83.99	2.5		
11	4680	127.42	0.90	WFA 97 WFAF97 WF 97 WFF 97	4P
13	4150	112.99	1.05		
14	3750	102.16	1.15		

输出转速 Output speed (r/min)	输出转矩 Output torque (N.M)	传动比 Ratio (i)	使用系数 Service factor (f_B)	机型号 Type	电机级数 Motor pole
5.5KW					
15	3580	97.58	1.20	WFA 97 WFAF97 WF 97 WFF 97	4P
16	3300	89.85	1.30		
17	3180	86.59	1.35		
18	2950	80.31	1.45		
19	2780	75.63	1.55		
20	2660	72.30	1.60		
22	2400	65.47	1.80		
25	2130	58.06	2.0		
27	1930	52.49	2.2		
16	3230	88.01	0.95	WFA 87 WFAF87 WF 87 WFF 87	4P
19	2810	76.39	1.05		
21	2510	68.40	1.20		
25	2080	56.75	1.45		
28	1850	50.36	1.60		
32	1660	45.28	1.70		
36	1440	39.30	1.90		
41	1290	35.19	2.0		
49	1070	29.20	2.3		
42	1250	33.92	2.1		
50	1060	28.78	2.3		
54	970	26.50	3.1		
60	870	23.68	3.5		
30	1780	48.37	0.85	WFA 77 WFAF77 WF 77 WFF 77	4P
33	1600	43.58	0.95		
37	1400	38.23	1.05		
42	1240	33.74	1.20		
48	1100	29.91	1.35		
56	940	25.54	1.55		
56	940	25.50	1.60		
67	785	21.43	1.90		
73	725	19.70	2.1		
82	645	17.49	2.3		
91	575	15.64	2.6		
102	515	14.06	2.9		
117	450	12.21	3.3		
65	810	22.05	1.00	WFA 67 WFAF67 WF 67 WFF 67	4P
68	770	20.90	1.05		
78	670	18.29	1.20		
87	605	16.48	1.35		
99	530	14.46	1.55		
112	470	12.76	1.75		
126	415	11.31	1.95		
148	355	9.66	2.3		
158	335	9.08	1.60		
166	315	8.60	1.80		
190	275	7.53	2.2		
211	250	6.78	2.5		
240	220	5.95	2.8		
272	193	5.25	3.1		
307	171	4.66	3.3		
360	146	3.97	3.4		
85	620	16.81	0.95	WFA 57 WFAF57 WF 57 WFF 57	4P
90	585	15.88	1.05		
106	495	13.52	1.20		
116	450	12.29	1.35		
134	390	10.64	1.55		
175	300	8.19	1.40		
185	285	7.73	1.50		
217	240	6.58	1.75		
239	220	5.98	1.90		
276	190	5.18	2.2		

输出转速 Output speed (r/min)	输出转矩 Output torque (N.M)	传动比 Ratio (i)	使用系数 Service factor (f_B)	机型号 Type	电机级数 Motor pole
7.5KW					
4.6	14300	312	0.85	WFA 127WR87 WFAF127WR87 WF 127WR87 WFF 127 WR87	4P
4.9	13500	293	0.90		
5.5	11900	259	1.00		
6.4	10300	223	1.15		
7.2	9080	198	1.30		
3.3	21600	217.62	0.85	WFA 157 WFAF157 WF 157 WFF 157	8P
4.0	17700	178.20	1.00		
4.4	16200	162.96	1.10		
5.1	14100	141.80	1.30		
5.8	12400	125.14	1.45		
6.6	10800	108.49	1.65		
7.5	9600	96.53	1.85		
8.4	8530	85.80	2.1		
9.2	7810	78.46	2.3		
11	6790	68.28	2.7		
12	5990	60.25	3.0		
14	5200	52.24	3.5		
15	4620	46.48	3.9		
18	3980	40.06	4.5		
3.6	20000	267.43	0.90	WFA 157 WFAF157 WF 157 WFF 157	6P
4.4	16200	217.62	1.10		
5.4	13300	178.20	1.35		
5.9	12200	162.96	1.50		
6.8	10600	141.80	1.70		
7.7	9340	125.14	1.95		
8.9	8090	108.49	2.2		
9.9	7200	96.53	2.5		
11	6400	85.80	2.8		
12	5850	78.46	3.1		
14	5090	68.28	3.5		
16	4500	60.25	4.0		
18	3900	52.24	4.6		
5.7	12500	125.04	0.95	WFA 127 WFAF127 WF 127 WFF 127	8P
6.3	11400	114.04	1.05		
7.3	9840	98.69	1.20		
8.2	8690	87.08	1.40		
5.6	12700	170.38	0.95	WFA 127 WFAF127 WF 127 WFF 127	6P
6.2	11500	153.27	1.05		
7.7	9350	125.04	1.30		
8.4	8530	114.04	1.40		
8.4	8560	170.38	1.40	WFA 127 WFAF127 WF 127 WFF 127	4P
9.3	7700	153.27	1.55		
11	6280	125.04	1.90		
8.0	8950	178.64	0.85	WFA 107 WFAF107 WF 107 WFF 107	4P
8.9	8080	161.28	0.95		
9.8	7340	146.49	1.05		
11	6410	129.97	1.20		
12	5910	117.94	1.30		
14	5080	101.38	1.50		
15	4630	92.47	1.65		
16	4430	88.49	1.75		
17	4210	63.99	1.85		
19	3730	74.52	2.1		
21	3390	67.62	2.3		
15	4890	97.58	0.90	WFA 97 WFAF97 WF 97 WFF 97	4P
16	4500	89.85	0.95		
17	4340	86.59	1.00		
18	4020	80.31	1.05		
19	3790	75.63	1.15		
20	3620	72.30	1.20		
22	3280	65.47	1.30		

输出转速 Output speed (r/min)	输出转矩 Output torque (N.M)	传动比 Ratio (i)	使用系数 Service factor (f_B)	机型号 Type	电机级数 Motor pole
7.5KW					
25	2910	58.06	1.50	WFA 97 WFAF97 WF 97 WFF 97	4P
27	2630	52.49	1.65		
32	2230	44.49	1.95		
37	1950	38.86	2.2		
44	1630	32.50	2.6		
33	2170	43.28	1.40		
39	1840	36.64	1.65		
42	1700	33.91	2.5		
47	1520	30.39	2.8		
25	2840	56.75	1.05	WFA 87 WFAF87 WF 87 WFF 87	4P
28	2520	50.36	1.15		
32	2270	45.28	1.25		
36	1970	39.30	1.40		
41	1760	35.19	1.50		
49	1460	29.20	1.70		
50	1440	28.78	1.70		
54	1330	26.50	2.3		
60	1190	23.68	2.5		
67	1070	21.32	2.8		
74	970	19.31	3.1		
84	860	17.12	3.5		
92	775	15.48	3.9		
42	1690	33.74	0.90	WFA 77 WFAF77 WF 77 WFF 77	4P
48	1500	29.91	1.00		
56	1280	25.54	1.15		
56	1280	25.50	1.15		
67	1070	21.43	1.40		
73	990	19.70	1.50		
82	880	17.49	1.70		
91	785	15.64	1.90		
102	705	14.06	2.1		
117	610	12.21	2.5		
131	545	10.93	2.7		
154	465	9.30	2.3		
173	415	8.26	2.6		
194	370	7.38	2.9		
215	335	6.64	3.2		
248	290	5.76	3.7		
277	260	5.16	4.2		
344	215	4.28	4.7		
11.0KW					
4.8	20300	302	0.90	WFA 157WR97 WFAF157WR97 WF 157WR97 WFF 157 WR97	4P
5.3	18300	273	1.00		
6.2	15500	232	1.15		
7.1	13500	202	1.35		
7.3	13200	197	1.35		
6.4	15000	223	0.80	WFA 127WR87 WFAF127WR87 WF 127WR87 WFF 127 WR87	4P
7.3	13300	198	0.90		
8.7	11100	166	1.10		
5.1	20700	141.80	0.85	WFA 157 WFAF157 WF 157 WFF 157	8P
5.8	18300	125.14	1.00		
6.6	15800	108.49	1.15		
7.5	14100	96.53	1.30		
5.4	19500	178.20	0.90	WFA 157 WFAF157 WF 157 WFF 157	6P
5.9	17800	162.96	1.00		
6.8	15500	141.80	1.15		
7.7	13700	125.14	1.30		
8.9	11900	108.49	1.50		
9.9	10600	96.53	1.70		
11	9390	85.80	1.90		
12	8590	78.46	2.1		

输出转速 Output speed (r/min)	输出转矩 Output torque (N.M)	传动比 Ratio (i)	使用系数 Service factor (f_B)	机型号 Type	电机级数 Motor pole
11.0KW					
5.4	19500	267.43	0.90	WFA 157 WFAF157 WF 157 WFF 157	4P
6.6	15900	217.62	1.15		
8.1	13000	178.20	1.40		
8.8	11900	162.96	1.50		
10	10300	141.80	1.75		
12	9130	125.14	1.95		
13	7910	108.49	2.3		
15	7040	96.53	2.6		
17	6260	85.80	2.9		
18	5720	78.46	3.1		
21	4980	68.28	3.6		
7.7	13700	125.04	0.85	WFA 127 WFAF127 WF 127 WFF 127	6P
8.4	12500	114.04	0.95		
9.7	10800	98.69	1.10		
11	9550	87.08	1.25		
13	8250	75.21	1.45		
8.4	12500	170.38	0.95	WFA 127 WFAF127 WF 127 WFF 127	4P
9.4	11200	153.27	1.05		
11	9150	125.04	1.30		
13	8340	114.04	1.45		
15	7220	98.69	1.65		
16	6370	87.08	1.90		
19	5500	75.21	2.2		
12	8600	117.94	0.90	WFA 107 WFAF107 WF 107 WFF 107	4P
14	7400	27.57	1.05		
16	6750	25.14	1.15		
17	6130	83.99	1.25		
19	5440	74.52	1.40		
21	4930	67.62	1.55		
25	4240	58.12	1.80		
28	3700	50.73	2.1		
33	3140	43.03	2.5		
43	2470	33.79	3.0		
52	2010	27.57	3.9		
57	1830	25.14	4.3		
22	4780	65.47	0.90	WFA 97 WFAF97 WF 97 WFF 97	4P
25	4240	58.06	1.00		
27	3830	52.49	1.10		
32	3250	44.49	1.30		
37	2830	38.86	1.50		
44	2370	32.50	1.80		
42	2470	33.91	1.75		
47	2220	30.39	1.95		
52	2000	27.44	2.2		
58	1820	24.92	2.4		
65	1610	22.11	2.7		
37	2870	39.30	0.95	WFA 87 WFAF87 WF 87 WFF 87	4P
41	2570	35.19	1.00		
49	2130	29.20	1.20		
54	1930	26.50	1.55		
61	1730	23.68	1.75		
68	1560	21.32	1.95		
75	1410	19.31	2.1		
84	1250	17.12	2.4		
93	1130	15.48	2.7		
110	960	13.12	3.1		
73	1440	19.70	1.05	WFA 77 WFAF77 WF 77 WFF 77	4P
82	1280	17.49	1.20		
92	1140	15.64	1.30		
102	1030	14.06	1.45		
118	890	12.21	1.70		
132	795	10.93	1.90		
155	680	9.30	1.60		

输出转速 Output speed (r/min)	输出转矩 Output torque (N.M)	传动比 Ratio (i)	使用系数 Service factor (f_B)	机型号 Type	电机级数 Motor pole
11.0KW					
174	605	8.26	1.80	WFA 77 WFAF77 WF 77 WFF 77	4P
195	540	7.38	2.0		
217	485	6.64	2.2		
250	420	5.76	2.6		
279	375	5.16	2.9		
336	310	4.28	3.2		
15KW					
6.3	20900	232	0.85	WFA 157WR97 WFAF157WR97 WF 157WR97 WFF 157 WR97	4P
7.2	18300	202	1.00		
7.4	17700	197	1.00		
6.8	20900	141.80	0.85	WFA 157 WFAF157 WF 157 WFF 157	6P
7.8	18500	125.14	0.95		
8.9	16000	108.49	1.10		
10	14300	86.53	1.25		
11	12700	85.80	1.40		
6.7	21400	217.62	0.85	WFA 157 WFAF157 WF 157 WFF 157	4P
8.2	17500	178.20	1.05		
9.0	16000	162.96	1.15		
10	13900	141.80	1.30		
12	12300	125.14	1.45		
13	10600	108.49	1.70		
15	9470	96.53	1.90		
17	8420	85.80	2.1		
19	7700	78.46	2.3		
21	6700	68.28	2.7		
24	5910	60.25	3.0		
9.8	14600	98.69	0.80	WFA 127 WFAF127 WF 127 WFF 127	6P
11	12900	87.08	0.95		
13	11100	75.21	1.10		
14	10300	69.89	1.15		
15	9440	63.74	1.25		
12	12300	125.04	1.00	WFA 127 WFAF127 WF 127 WFF 127	4P
13	11200	114.04	1.05		
15	9710	98.69	1.25		
17	8570	87.08	1.40		
19	7400	75.21	1.60		
21	6870	69.89	1.75		
16	9070	92.47	0.85	WFA 107 WFAF107 WF 107 WFF 107	4P
17	8680	88.49	0.90		
17	8240	83.99	0.95		
20	7310	74.52	1.05		
22	6630	67.62	1.15		
25	5700	58.12	1.35		
29	4980	50.73	1.55		
34	4220	43.03	1.80		
39	3690	37.61	2.1		
46	3120	31.80	2.5		
43	3320	33.79	2.2		
53	2700	27.57	2.9		
58	2470	25.14	3.2		
67	2130	21.76	3.7		
33	4360	44.49	1.00	WFA 97 WFAF97 WF 97 WFF 97	4P
38	3810	38.86	1.15		
45	3190	32.50	1.35		
43	3330	33.91	1.30		
48	2980	30.39	1.45		
53	2690	27.44	1.60		

输出转速 Output speed (r/min)	输出转矩 Output torque (N.M)	传动比 Ratio (i)	使用系数 Service factor (f_B)	机型号 Type	电机级数 Motor pole
15.0KW					
59	2450	24.92	1.75	WFA 97 WFAF97 WF 97 WFF 97	4P
66	2170	22.11	2.0		
73	1970	20.07	2.2		
85	1690	17.25	2.5		
97	1480	15.06	2.9		
114	1250	12.77	3.4		
131	1100	11.16	3.7		
55	2600	26.50	1.15	WFA 87 WFAF87 WF 87 WFF 87	4P
62	2320	23.68	1.30		
68	2090	21.32	1.45		
76	1890	19.31	1.60		
85	1680	17.12	1.80		
94	1520	15.48	2.0		
111	1290	13.12	2.3		
127	1120	11.46	2.7		
152	940	9.58	3.1		
176	810	8.30	1.90		
199	720	7.35	2.1		
220	650	6.65	2.3		
259	555	5.63	2.8		
297	485	4.92	3.2		
355	405	4.12	3.6		
18.5KW					
7.2	22500	202	0.80	WFA 157WR97 WFAF157WR97 WF 157WR97 WFF 157 WR97	4P
7.5	21800	197	0.80		
8.2	21500	178.20	0.85	WFA 157 WFAF157 WF 157 WFF 157	4P
9.0	19700	162.96	0.90		
10	17100	141.80	1.05		
12	15100	125.14	1.20		
14	13100	108.49	1.40		
15	11600	96.53	1.55		
17	10300	85.80	1.75		
19	9760	78.46	1.90		
21	8230	68.28	2.2		
24	7270	60.25	2.5		
28	6300	52.24	2.9		
13	13800	114.04	0.85	WFA 127 WFAF127 WF 127 WFF 127	4P
15	11900	98.69	1.00		
17	10500	87.08	1.15		
19	9090	75.21	1.30		
21	8450	69.89	1.40		
23	7710	63.74	1.55		
26	6670	55.16	1.80		
30	5880	48.67	2.0		
20	8990	74.52	0.85	WFA 107 WFAF107 WF 107 WFF 107	4P
22	8150	67.62	0.95		
25	7010	58.12	1.10		
29	6120	50.73	1.25		
34	5190	43.03	1.50		
39	4540	37.61	1.70		
46	3830	31.80	2.0		
43	4070	33.79	1.80		
53	3320	27.57	2.4		
58	3030	25.14	2.6		
67	2620	21.76	3.0		
38	4690	38.86	0.90	WFA 97 WFAF97 WF 97 WFF 97	4P
45	3920	32.50	1.10		
53	3310	27.44	1.30		
59	3010	24.92	1.45		
66	2670	22.11	1.60		

输出转速 Output speed (r/min)	输出转矩 Output torque (N.M)	传动比 Ratio (i)	使用系数 Service factor (f_B)	机型号 Type	电机级数 Motor pole
18.5KW					
73	2420	20.07	1.80	WFA 97 WFAF97 WF 97 WFF 97	4P
85	2080	17.25	2.1		
97	1820	15.06	2.4		
115	1540	12.77	2.8		
131	1350	11.16	3.0		
69	2570	21.32	1.15	WFA 87 WFAF87 WF 87 WFF 87	4P
76	2330	19.31	1.30		
86	2060	17.12	1.45		
95	1870	15.48	1.60		
112	1580	13.12	1.90		
128	1380	11.46	2.2		
153	1160	9.58	2.5		
177	1000	8.30	1.55		
199	890	7.35	1.75		
220	800	6.65	1.90		
260	680	5.63	2.2		
298	595	4.92	2.6		
356	495	4.12	2.9		
22KW					
10	20900	96.53	0.85	WFA 157 WFAF157 WF 157 WFF 157	6P
11	18600	85.80	0.95		
12	17000	78.46	1.05		
14	14800	68.28	1.20		
10	20300	141.80	0.90	WFA 157 WFAF157 WF 157 WFF 157	4P
12	17900	125.14	1.00		
14	15600	108.49	1.15		
15	13800	96.53	1.30		
17	12300	85.80	1.45		
19	11300	78.46	1.60		
21	9790	68.28	1.85		
24	8640	60.25	2.1		
28	7490	52.24	2.4		
32	6660	46.48	2.7		
37	5740	40.06	3.1		
45	4670	32.55	3.9		
15	14200	98.69	0.85	WFA 127 WFAF127 WF 127 WFF 127	4P
17	12500	87.08	0.95		
19	10800	75.21	1.10		
21	10000	69.89	1.20		
23	9160	63.74	1.30		
26	7930	55.16	1.50		
30	7000	48.67	1.70		
35	6040	42.04	2.0		
25	8330	58.12	0.90	WFA 107 WFAF107 WF 107 WFF 107	4P
29	7280	50.73	1.05		
34	6170	43.03	1.25		
39	5390	37.61	1.40		
46	4560	31.80	1.70		
43	4850	33.76	1.55		
53	3950	27.57	2.0		
58	3610	25.14	2.2		
67	3120	21.76	2.5		
76	2750	19.20	2.8		
53	3940	27.44	1.10	WFA 97 WFAF97 WF 97 WFF 97	4P
59	3570	24.02	1.20		
66	3170	22.11	1.35		
73	2880	20.07	1.50		
85	2470	17.25	1.75		
97	2160	15.06	2.0		
115	1830	12.77	2.3		
131	1600	11.16	2.6		

输出转速 Output speed (r/min)	输出转矩 Output torque (N.M)	传动比 Ratio (i)	使用系数 Service factor (f_B)	机型号 Type	电机级数 Motor pole
22KW					
69	3060	21.32	1.00	WFA 87 WFAF87 WF 87 WFF 87	4P
76	2770	19.31	1.10		
86	2460	17.12	1.20		
95	2220	15.48	1.35		
112	1880	13.12	1.60		
128	1640	11.46	1.85		
153	1370	9.58	2.1		
177	1190	8.30	1.30		
199	1050	7.35	1.45		
220	950	6.65	1.60		
260	810	5.63	1.90		
298	705	4.92	2.2		
356	590	4.12	2.5		
30KW					
14	21100	108.49	0.85	WFA 157 WFAF157 WF 157 WFF 157	4P
15	18800	96.53	0.95		
17	16700	85.80	1.10		
19	15300	78.46	1.20		
22	13300	68.28	1.35		
24	11700	60.25	1.55		
28	10200	52.24	1.75		
32	9060	46.48	2.0		
37	7810	40.06	2.3		
19	14700	75.21	0.80	WFA 127 WFAF127 WF 127 WFF 127	4P
21	13700	69.89	0.90		
23	12500	63.74	0.95		
27	10800	55.16	1.10		
30	9510	48.67	1.25		
35	8210	42.04	1.45		
39	7270	37.18	1.65		
47	6110	31.25	1.95		
58	4930	25.24	2.4		
55	5240	26.79	1.60		
60	4790	24.50	1.80		
69	4170	21.32	2.9		
78	3680	18.82	3.0		
34	8390	43.03	0.90	WFA 107 WFAF107 WF 107 WFF 107	4P
39	7330	37.61	1.05		
46	6200	31.80	1.25		
53	5370	27.57	1.45		
58	4900	25.14	1.60		
68	4240	21.76	1.85		
77	3740	19.20	2.1		
89	3230	16.58	2.4		
100	2860	14.67	2.7		
119	2400	12.33	2.9		
148	1940	9.96	3.3		
66	4310	22.11	1.00	WFA 97 WFAF97 WF 97 WFF 97	4P
73	3910	20.07	1.10		
85	3360	17.25	1.30		
98	2930	15.06	1.45		
115	2490	12.77	1.75		
132	2180	11.16	1.96		
162	1770	9.06	1.35		
179	1600	8.22	1.45		
208	1380	7.07	1.70		
238	1200	6.17	1.85		
281	1020	5.23	2.1		
321	890	4.57	2.3		

输出转速 Output speed (r/min)	输出转矩 Output torque (N.M)	传动比 Ratio (i)	使用系数 Service factor (f_B)	机型号 Type	电机级数 Motor pole
37KW					
17	20600	85.80	0.85	WFA 157 WFAF157 WF 157 WFF 157	4P
19	18900	78.46	0.95		
22	16400	68.28	1.10		
24	14500	60.25	1.25		
28	12600	52.24	1.45		
32	11200	46.48	1.60		
37	9630	40.06	1.85		
45	7820	32.50	2.3		
53	6630	27.60	2.7		
27	13300	55.16	0.90	WFA 127 WFAF127 WF 127 WFF 127	4P
30	11700	48.67	1.00		
35	10100	42.04	1.20		
39	8960	37.18	1.35		
47	7530	31.25	1.60		
58	6080	25.24	1.95		
55	6460	26.79	1.30		
60	5910	24.50	1.45		
69	5140	21.32	2.3		
78	4530	18.82	2.4		
90	3930	16.31	2.8		
101	3500	14.51	3.1		
117	3010	12.51	3.3		
144	2450	10.16	3.9		
166	2130	8.62	3.3		
186	1890	7.88	3.2		
53	6630	27.57	1.20	WFA 107 WFAF107 WF 107 WFF 107	4P
58	6040	25.14	1.30		
68	5230	21.76	1.50		
77	4610	19.20	1.70		
89	3990	16.58	1.95		
100	3530	14.67	2.2		
119	2960	12.33	2.4		
148	2390	9.96	2.7		
152	2330	9.69	2.1		
176	2010	8.37	2.4		
199	1780	7.40	2.6		
236	1500	6.22	3.1		
45KW					
22	20000	68.28	0.90	WFA 157 WFAF157 WF 157 WFF 157	4P
24	17600	60.25	1.00		
28	15300	52.24	1.20		
32	13600	46.48	1.30		
37	11700	40.06	1.55		
45	9510	32.55	1.90		
53	8070	27.60	2.2		
30	14300	48.67	0.85	WFA 127 WFAF127 WF 127 WFF 127	4P
35	12300	42.04	0.95		
39	10900	37.18	1.10		
47	9160	31.25	1.30		
58	7400	25.24	1.60		
55	7850	26.79	1.10		
60	7180	24.50	1.20		
69	6250	21.32	1.90		
78	5520	18.82	2.0		
90	4780	16.31	2.3		
101	4250	14.51	2.6		
117	3670	12.51	2.7		
144	2980	10.16	3.2		
166	2590	8.62	2.7		
186	2300	7.88	2.6		
216	1990	6.80	3.5		
266	1610	5.52	3.7		

输出转速 Output speed (r/min)	输出转矩 Output torque (N.M)	传动比 Ratio (i)	使用系数 Service factor (f_B)	机型号 Type	电机级数 Motor pole
45KW					
53	8060	27.57	0.95	WFA 107 WFAF107 WF 107 WFF 107	4P
58	7350	25.14	1.05		
68	6060	21.76	1.25		
77	5610	19.20	1.40		
89	4850	16.58	1.60		
100	4290	14.67	1.80		
119	3600	12.33	1.95		
148	2910	9.96	2.2		
152	2830	9.69	1.75		
176	2450	8.37	1.95		
199	2160	7.40	2.1		
236	1820	6.22	2.5		
55KW					
24	21500	60.25	0.85	WFA 157 WFAF157 WF 157 WFF 157	4P
28	18600	52.24	0.95		
32	16500	46.48	1.10		
37	14300	40.06	1.25		
45	11600	32.55	1.55		
53	9830	27.60	1.85		
52	10200	28.60	1.65		
58	9060	25.43	1.65		
67	7890	22.16	2.3		
75	7040	19.77	2.4		
88	6000	16.85	3.0		
40	13300	37.18	0.90	WFA 127 WFAF127 WF 127 WFF 127	4P
47	11200	31.25	1.10		
58	9010	25.24	1.35		
69	7610	21.32	1.60		
78	6720	18.82	1.65		
90	5820	16.31	1.90		
101	5180	14.51	2.1		
118	4470	12.51	2.2		
145	3630	10.16	2.6		
166	3160	8.62	2.2		
187	2810	7.88	2.1		
217	2420	6.80	2.9		
267	1970	5.52	3.0		
315	1670	4.68	3.6		
75KW					
32	22500	46.48	0.80	WFA 157 WFAF157 WF 157 WFF 157	4P
37	19400	40.06	0.95		
45	15800	32.55	1.15		
54	13400	27.60	1.35		
52	13800	28.60	1.25		
58	12300	25.43	1.20		
67	10700	22.16	1.70		
75	9570	19.77	1.80		
88	8150	16.85	2.2		
106	6760	13.96	2.5		
124	5770	11.92	2.8		
58	12200	25.24	1.00	WFA 127 WFAF127 WF 127 WFF 127	4P
69	10300	21.32	1.15		
78	9130	18.82	1.20		
90	7920	16.31	1.40		
102	7040	14.51	1.55		
118	6070	12.51	1.65		
145	4930	10.16	1.95		
167	4290	8.62	1.65		
188	3810	7.88	1.55		
218	3290	6.80	2.1		
268	2670	5.52	2.2		
316	2270	4.68	2.7		

输出转速 Output speed (r/min)	输出转矩 Output torque (N.M)	传动比 Ratio (i)	使用系数 Service factor (f_B)	机型号 Type	电机级数 Motor pole
90KW					
45	18900	32.55	0.95	WFA 157 WFAF157 WF 157 WFF 157	4P
54	16000	27.60	1.10		
52	16600	28.60	1.00		
58	14800	25.43	1.00		
67	12900	22.16	1.40		
75	11500	19.77	1.50		
88	9790	16.85	1.85		
106	8110	13.96	2.1		
124	6920	11.92	2.3		
58	14700	25.24	0.80	WFA 127 WFAF127 WF 127 WFF 127	4P
69	12400	21.32	0.95		
78	11000	18.82	1.00		
90	9500	16.31	1.15		
102	8450	14.51	1.30		
118	7280	12.51	1.35		
145	5920	10.16	1.60		
167	5150	8.62	1.35		
188	4580	7.88	1.30		
218	3950	6.80	1.75		
268	3210	5.52	1.85		
316	2720	4.68	2.2		
110KW					
54	19500	27.60	0.90	WFA 157 WFAF157 WF 157 WFF 157	4P
67	15700	22.16	1.15		
75	14000	19.77	1.20		
88	11900	16.85	1.50		
106	9880	13.96	1.70		
125	8430	11.92	1.90		
132KW					
67	18800	22.16	1.15	WFA 157 WFAF157 WF 157 WFF 157	4P
75	16800	19.77	1.20		
88	14300	16.85	1.50		
106	11900	13.96	1.70		
125	10100	11.92	1.90		
160KW					
88	17300	16.85	1.05	WFA 157 WFAF157 WF 157 WFF 157	4P
106	14400	13.96	1.20		
125	12300	11.92	1.30		
200KW					
88	21700	16.85	0.85	WFA 157 WFAF157 WF 157 WFF 157	4P
106	18000	13.96	0.95		
125	15300	11.92	1.05		

WF37

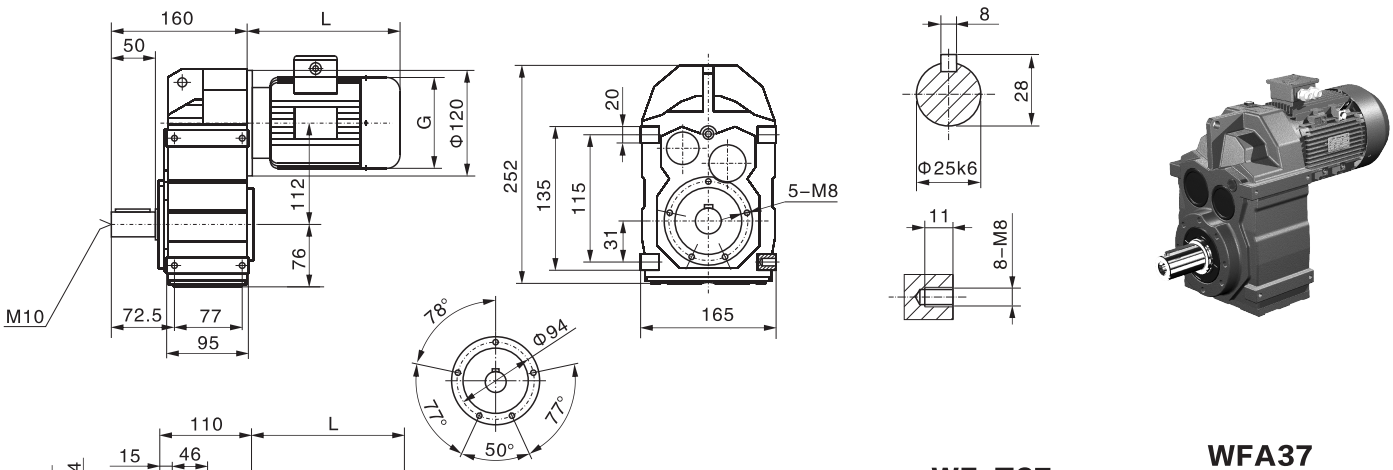

WFA37

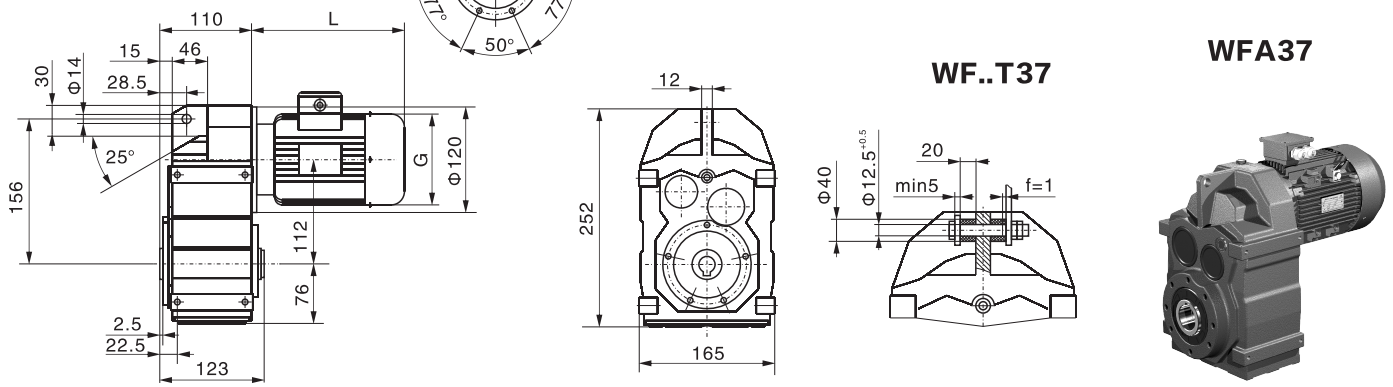

WFF37

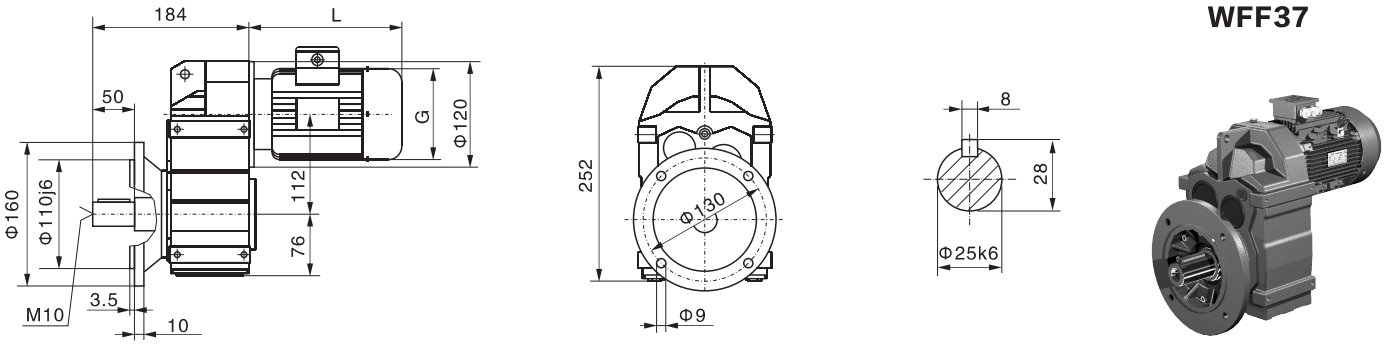

WFAF37

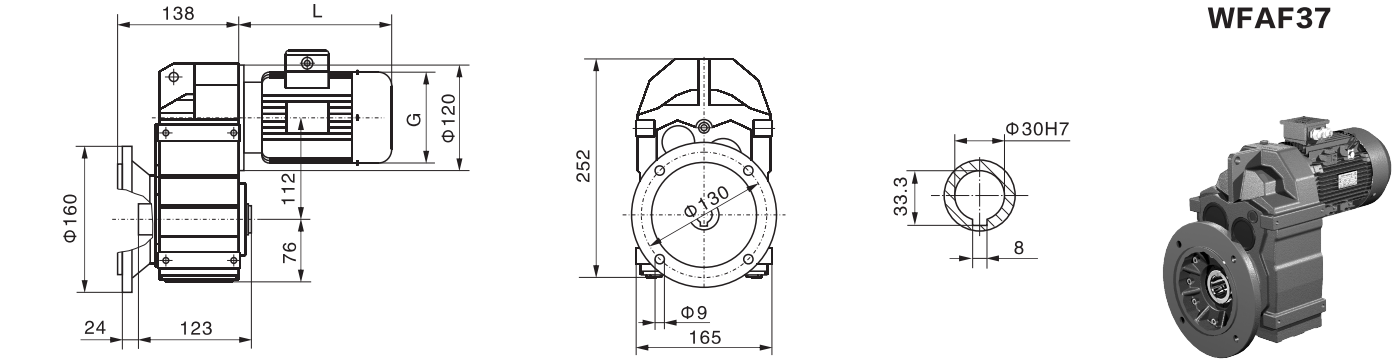

WFAZ37

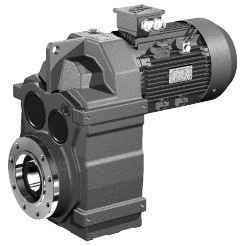

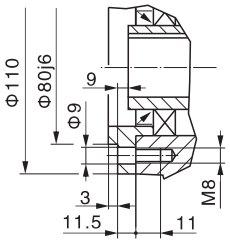

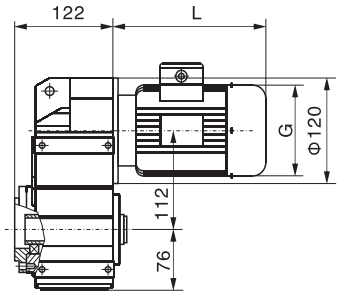

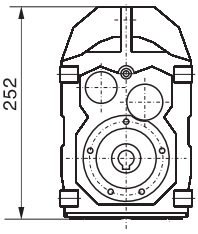

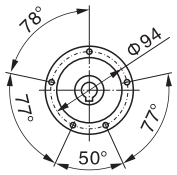

WF..37WR17

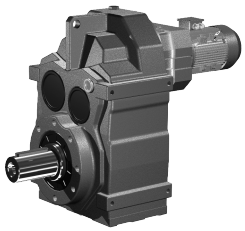

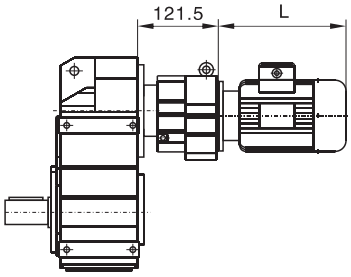

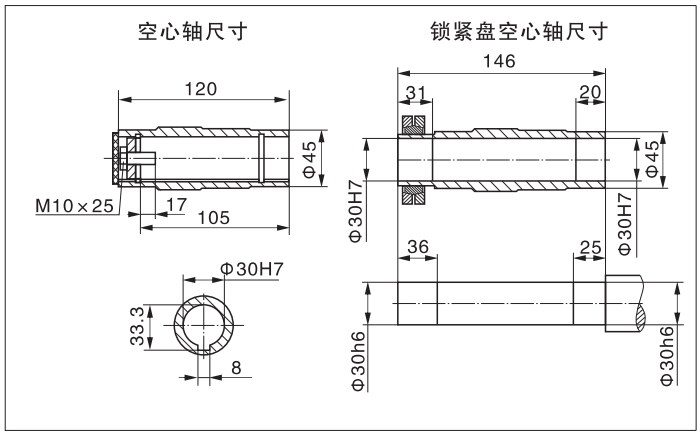

WF..S37

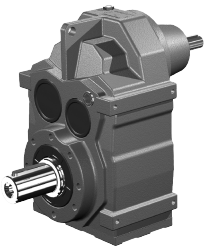

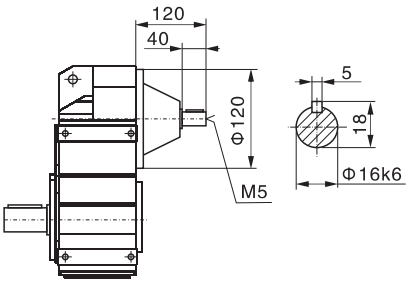

电机需方配或配特殊电机
时需加联接法兰（见第119页）

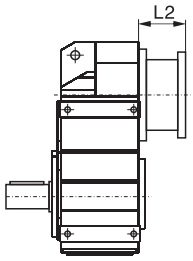

WF47

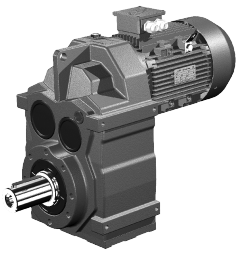

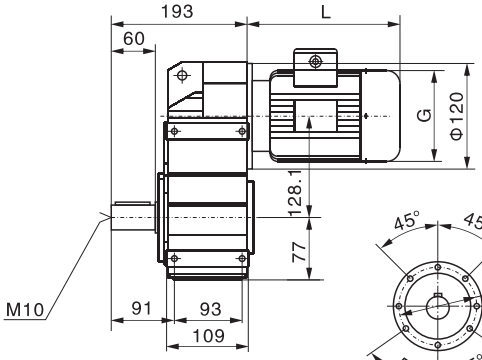

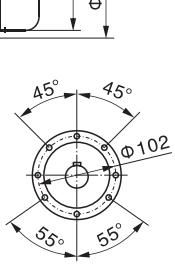

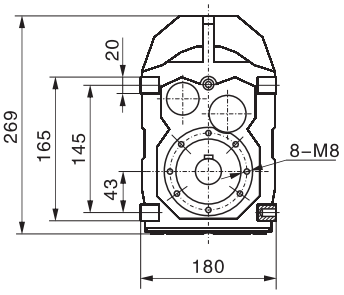

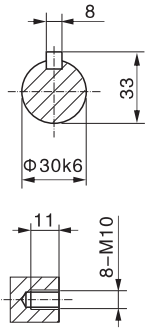

WFA47

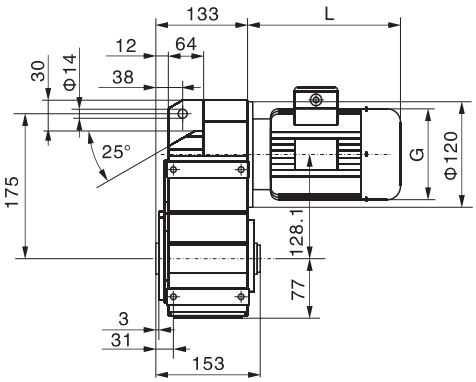

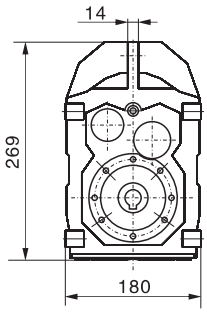

WF..T47

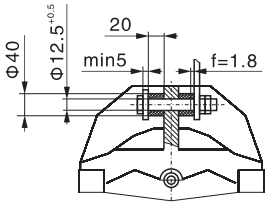

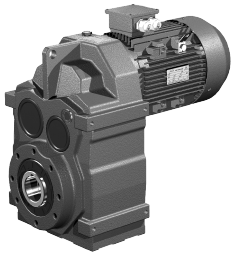

WFF47

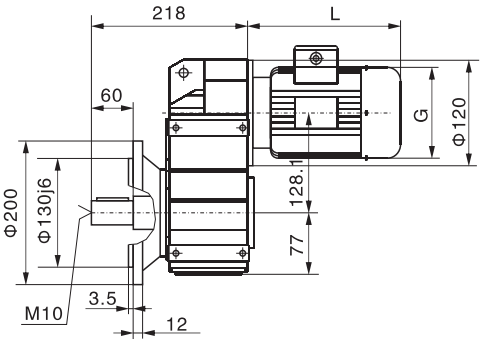

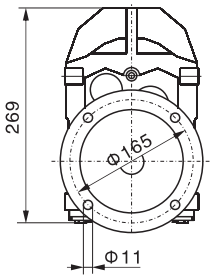

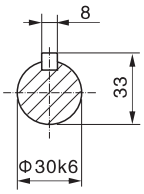

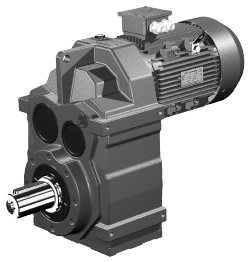

WFAF47

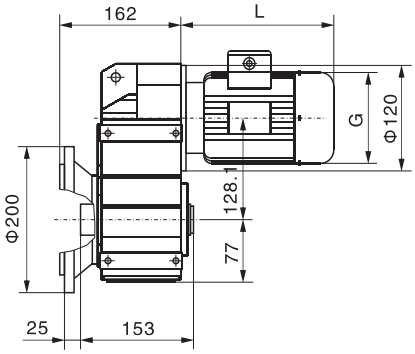

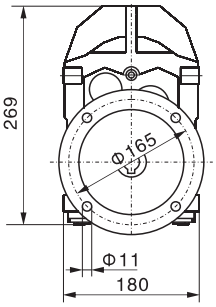

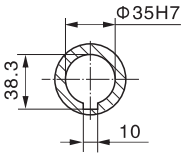

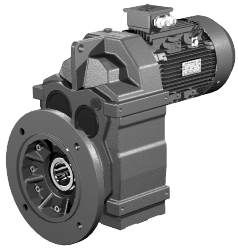

WFAZ47

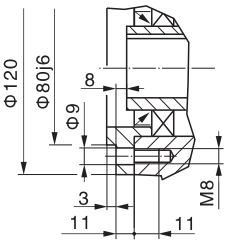

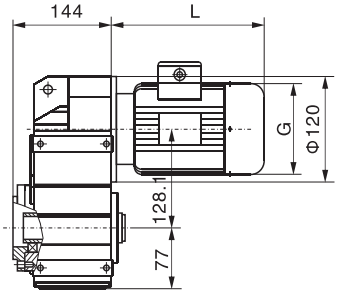

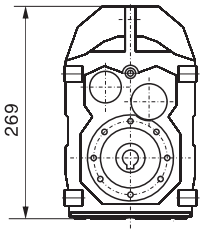

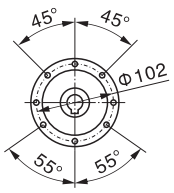

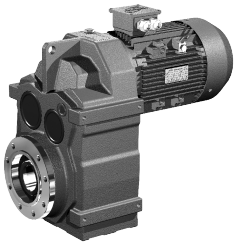

WF..47WR17

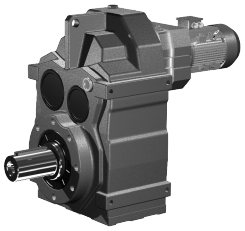

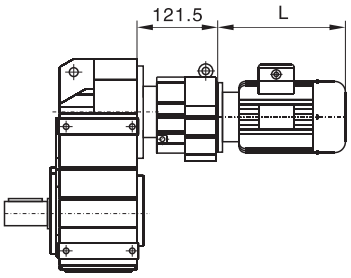

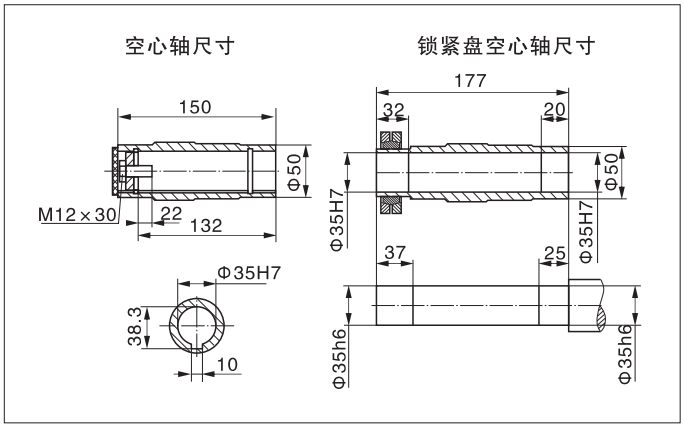

WF..S47

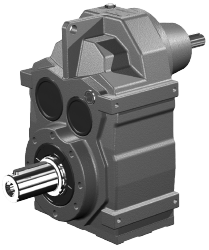

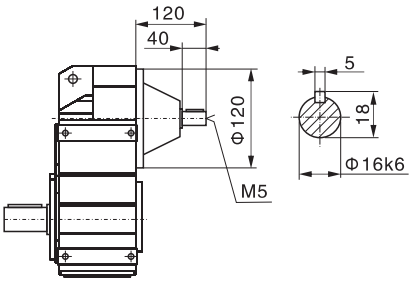

电机需方配或配特殊电机
时需加联接法兰（见第119页）

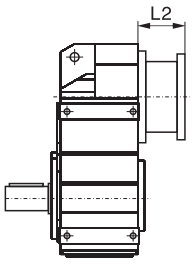

WF57

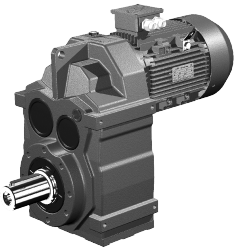

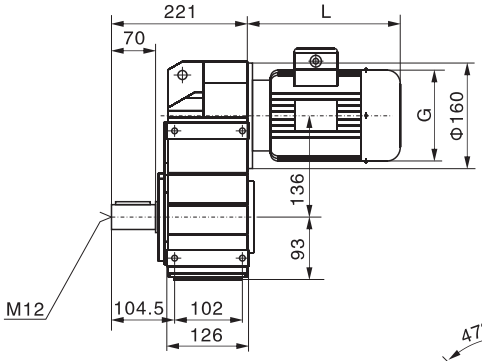

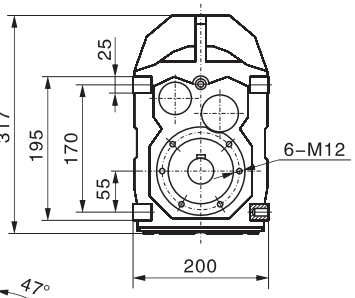

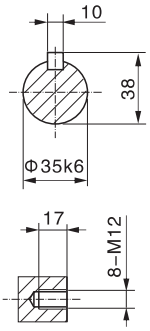

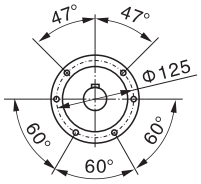

WFA57

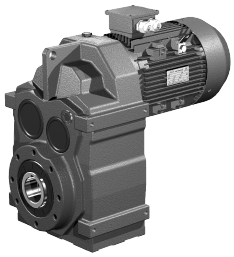

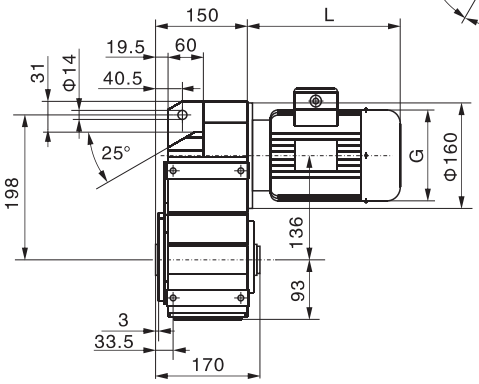

WF..T57

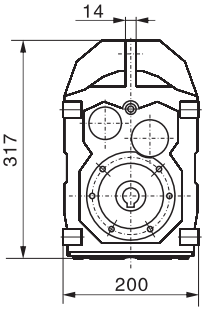

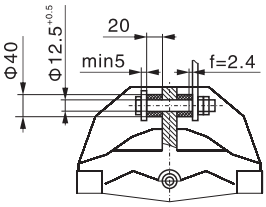

WFF57

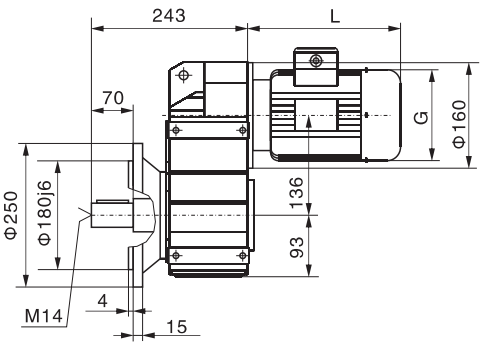

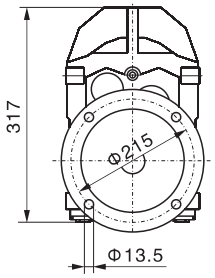

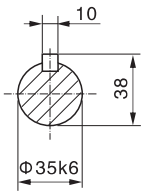

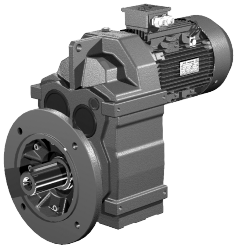

WFAF57

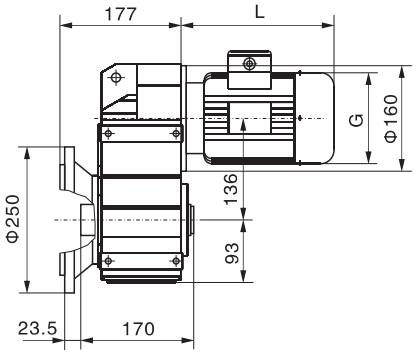

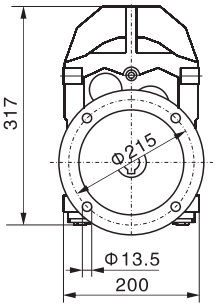

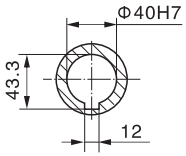

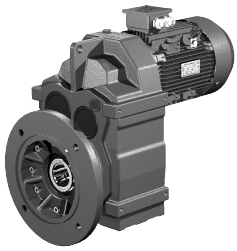

WFAZ57

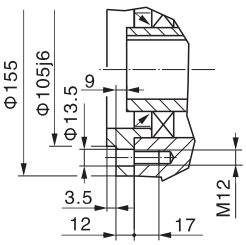

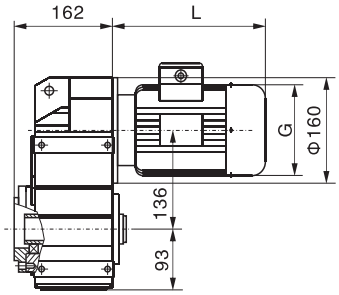

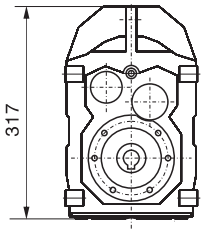

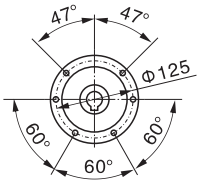

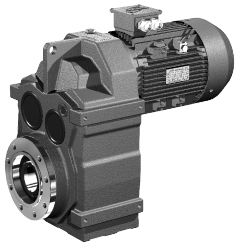

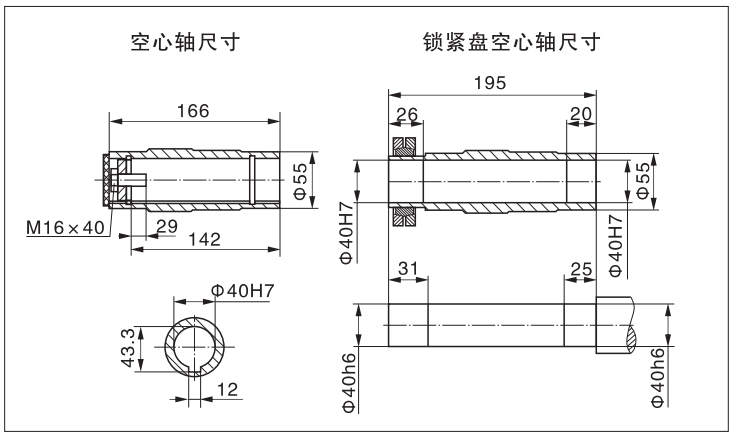

WF..57WR37

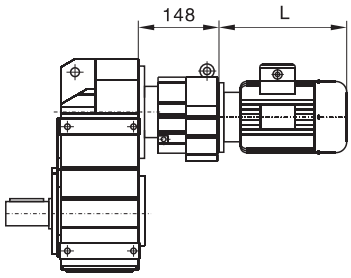

WF..S57

电机需方配或配特殊电机
时需加联接法兰（见第119页）

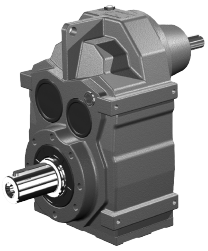

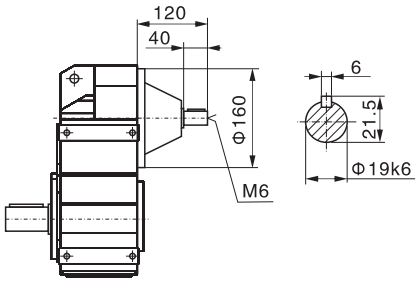

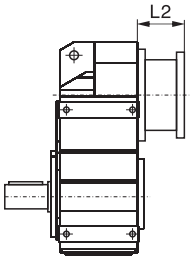

WF67

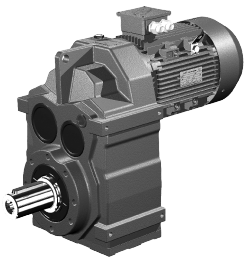

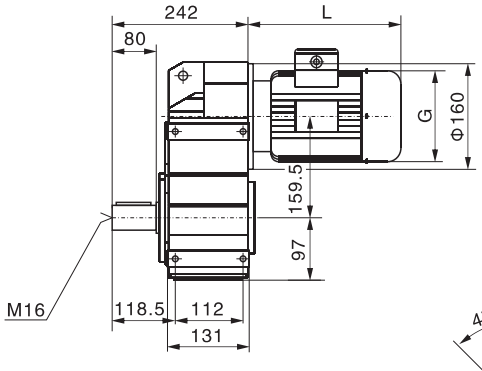

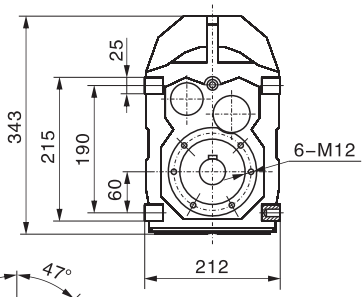

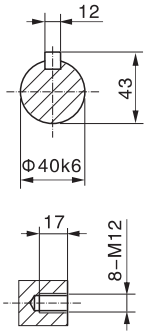

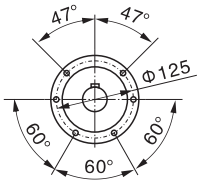

WFA67

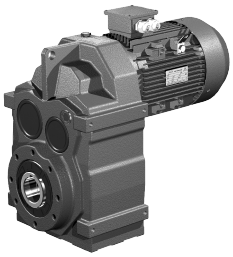

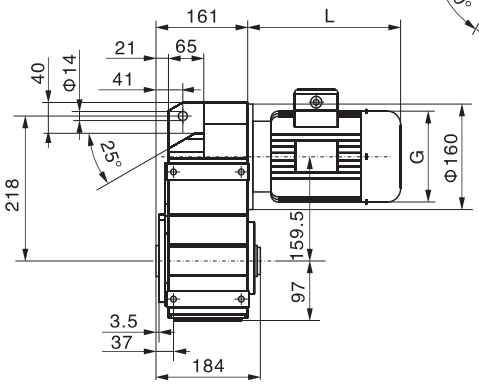

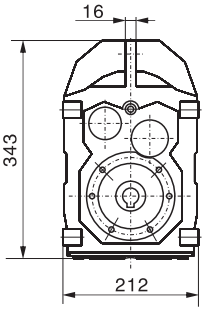

WF..T67

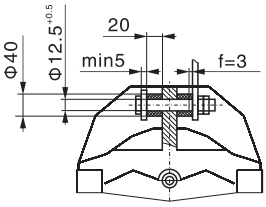

WFF67

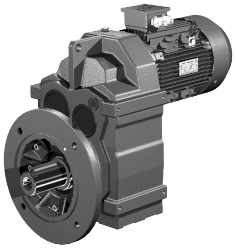

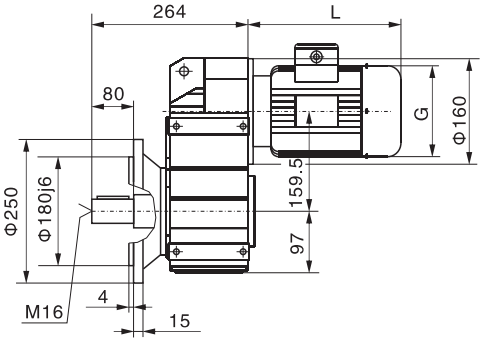

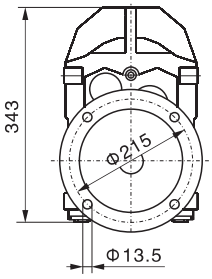

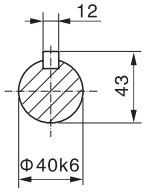

WFAF67

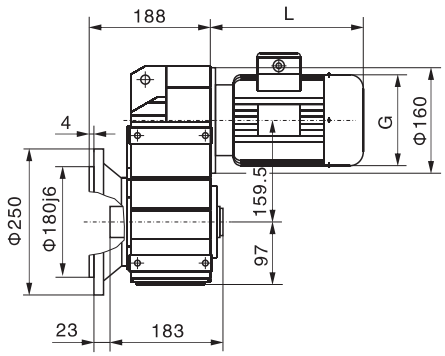

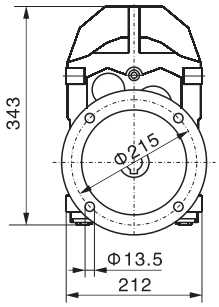

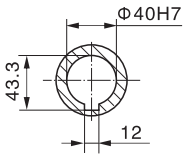

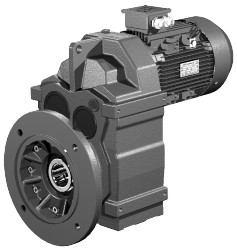

WFAZ67

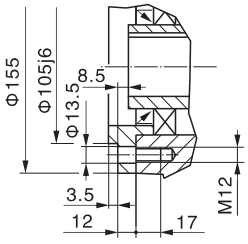

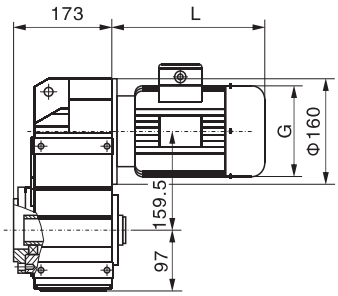

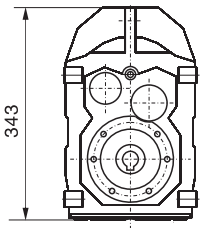

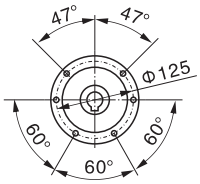

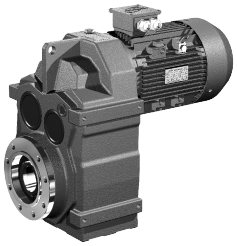

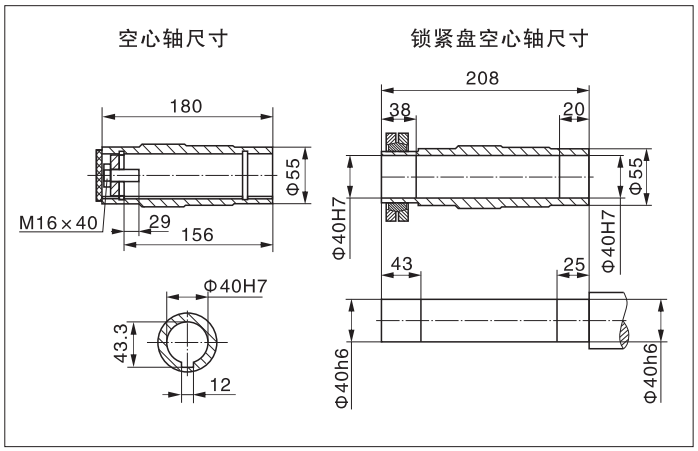

WF..67WR37

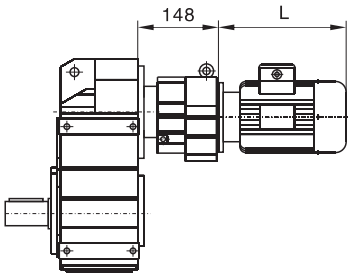

WF..S67

电机需方配或配特殊电机
时需加联接法兰（见第119页）

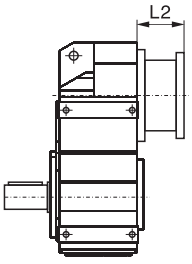

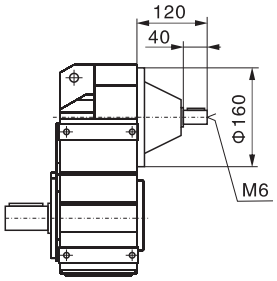

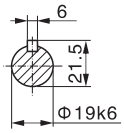

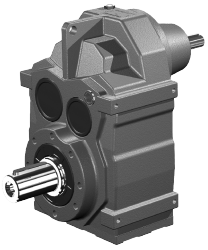

WF77

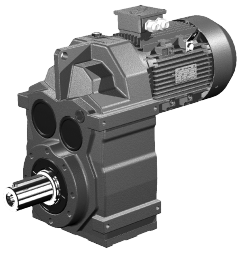

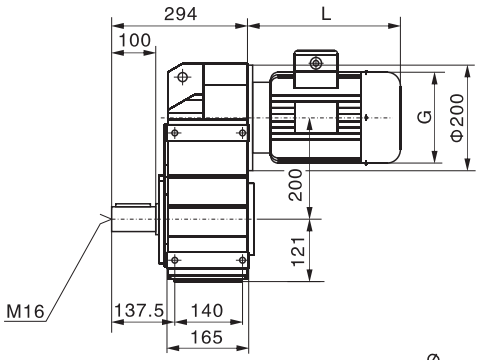

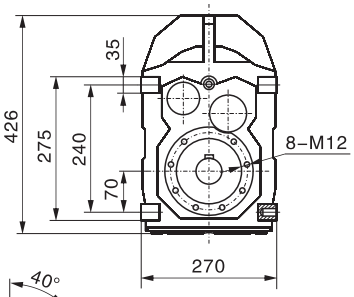

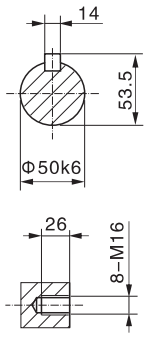

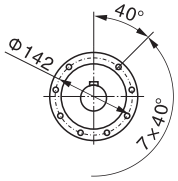

WFA77

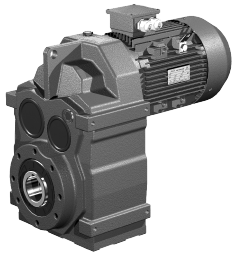

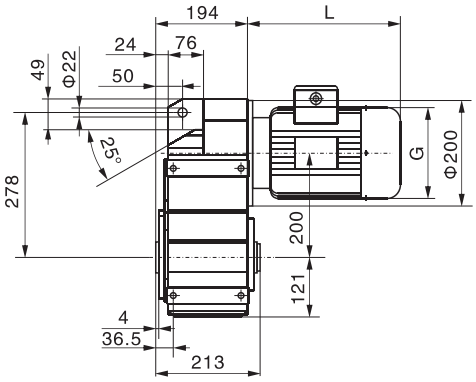

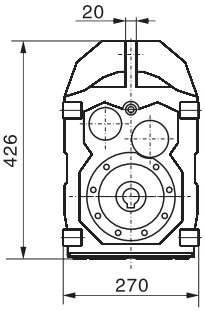

WF..T77

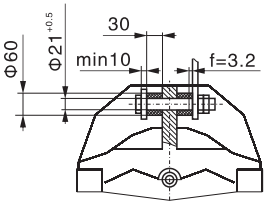

WFF77

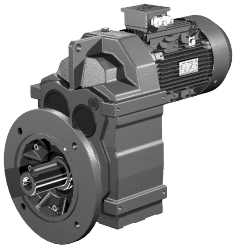

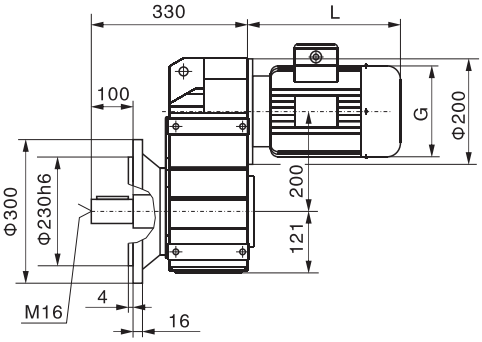

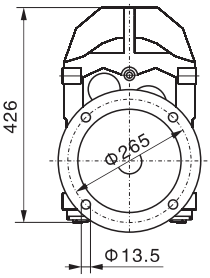

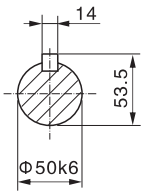

WFAF77

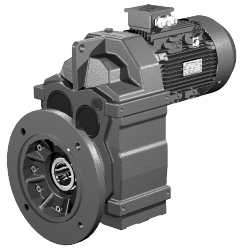

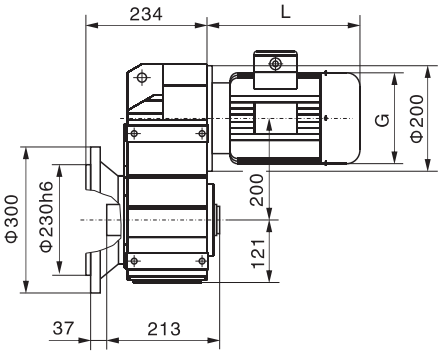

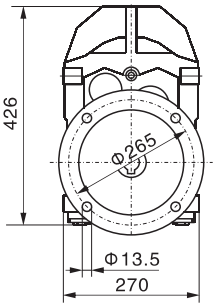

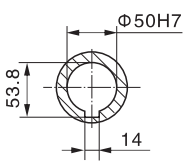

WFAZ77

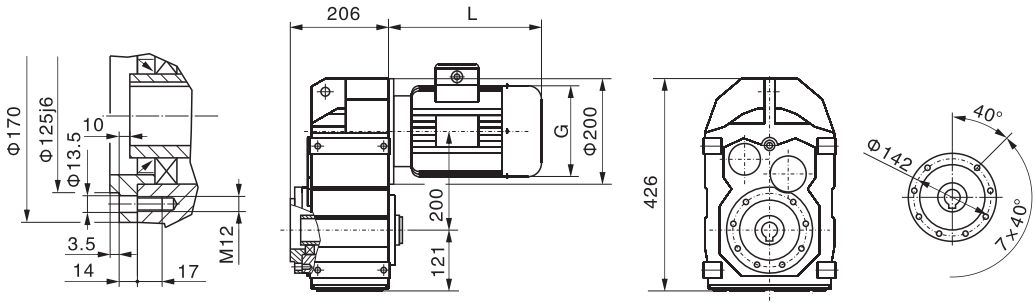

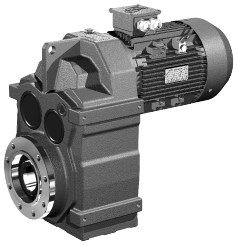

WF..77WR37

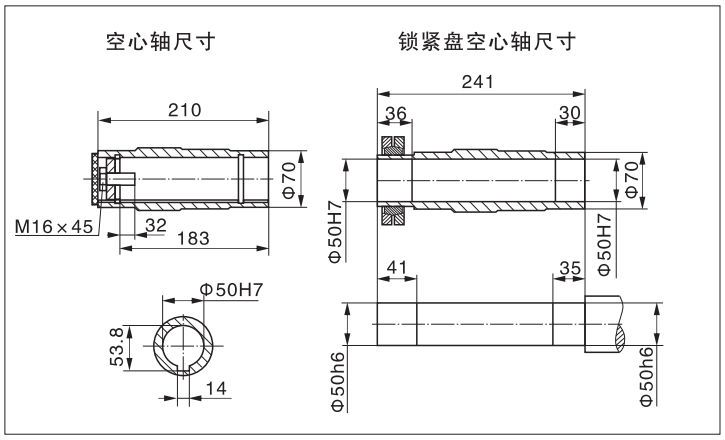

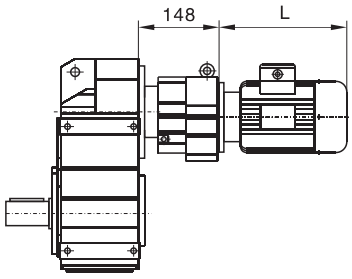

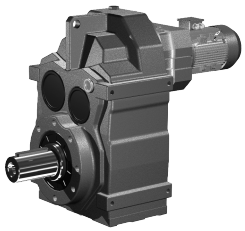

WF..S77

电机需方配或配特殊电机
时需加联接法兰（见第119页）

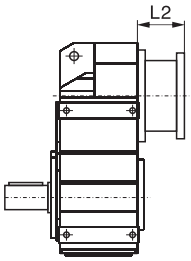

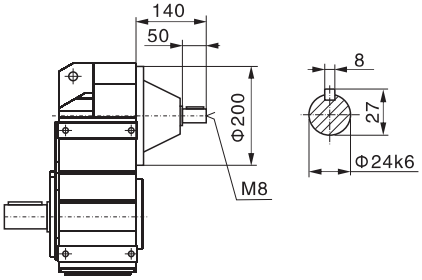

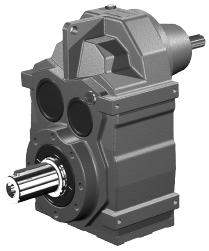

WF87

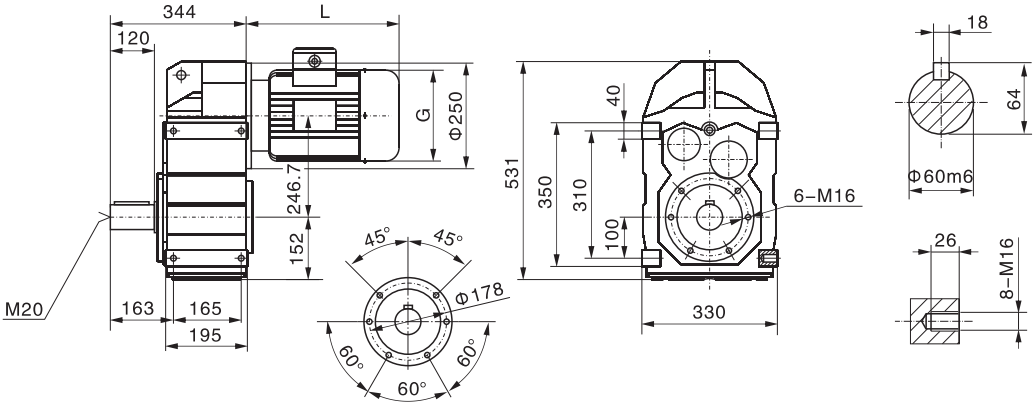

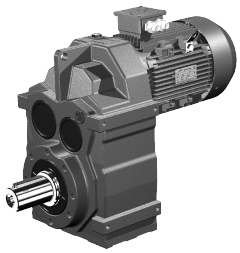

WFA87

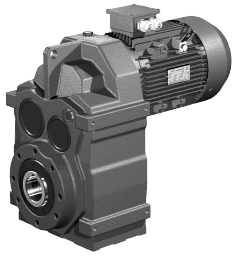

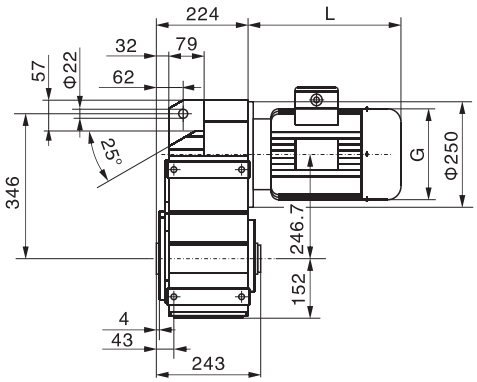

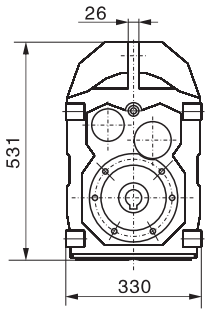

WF..T87

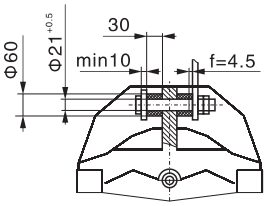

WFF87

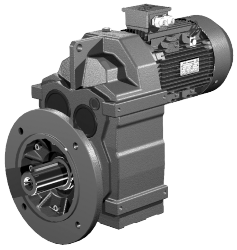

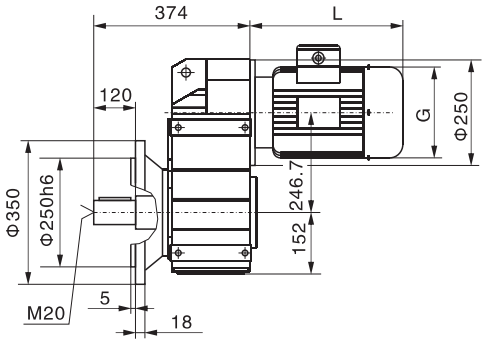

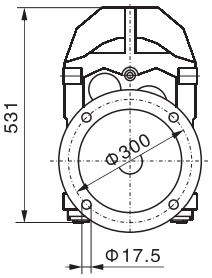

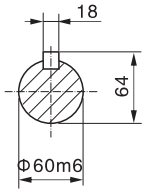

WFAF87

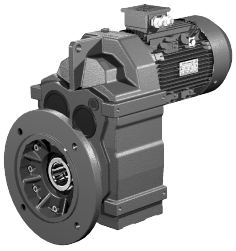

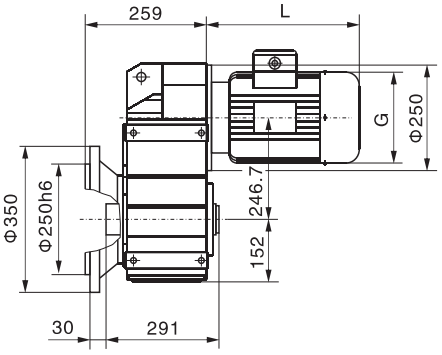

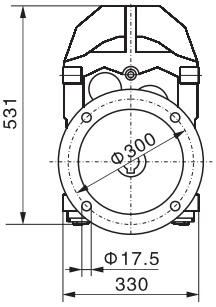

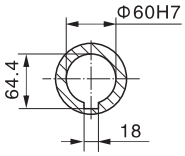

WFAZ87

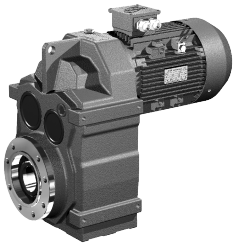

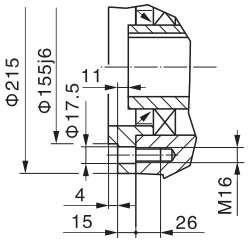

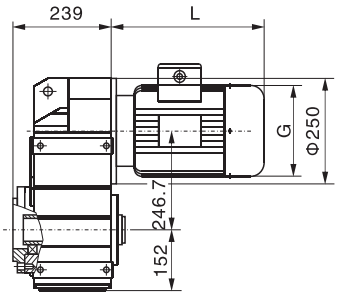

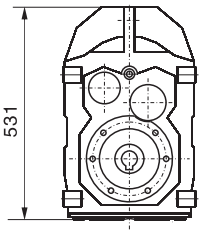

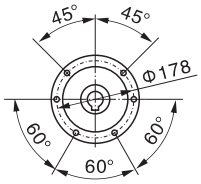

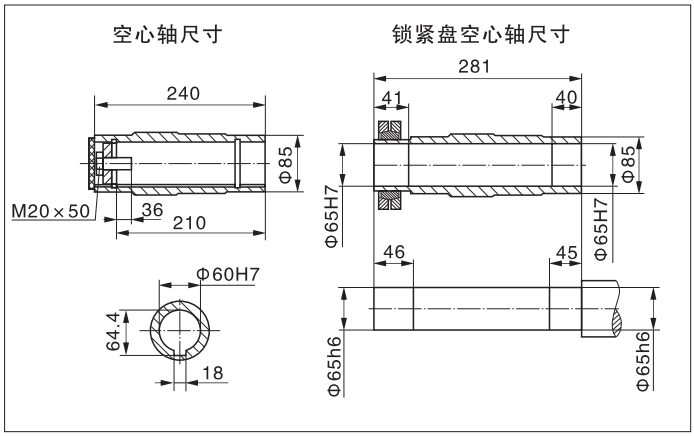

WF..87WR57

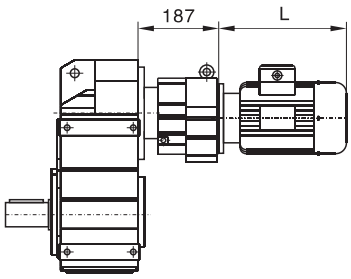

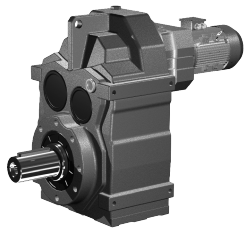

WF..S87

电机需方配或配特殊电机
时需加联接法兰（见第119页）

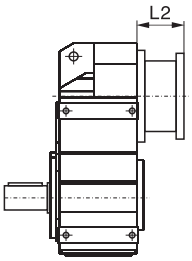

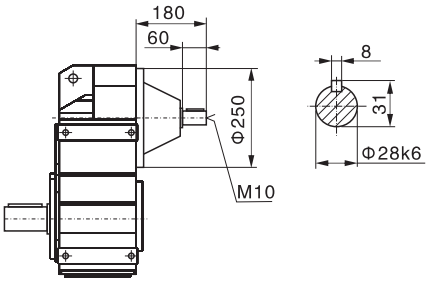

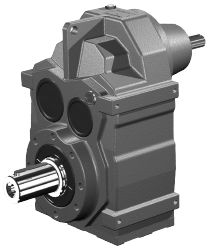

WF97

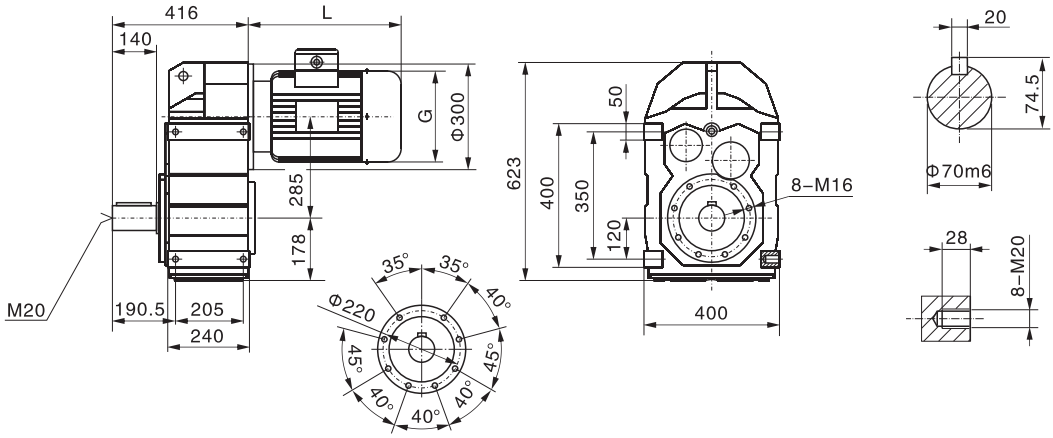

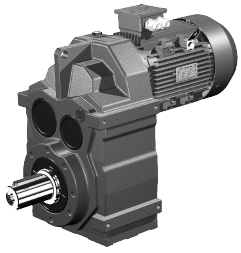

WFA97

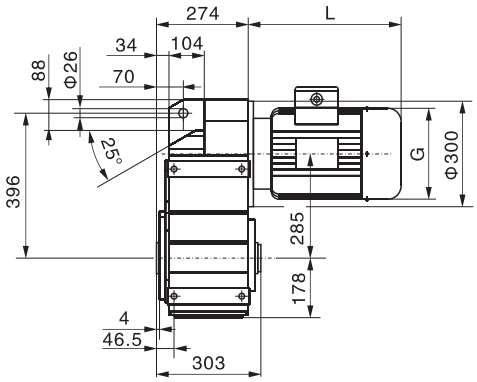

WF..T97

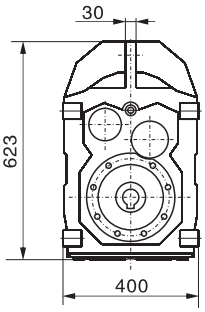

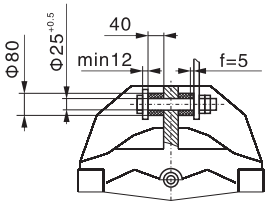

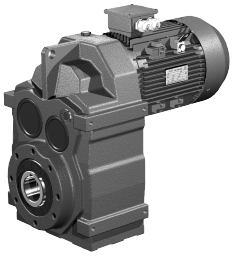

WFF97

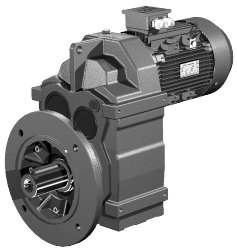

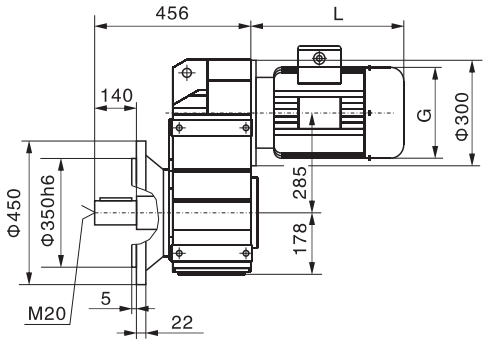

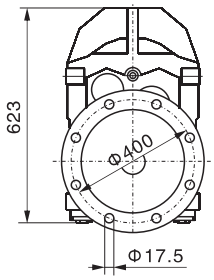

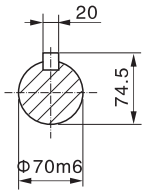

WFAF97

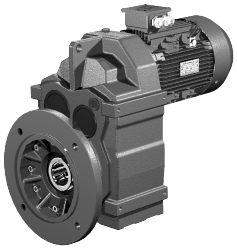

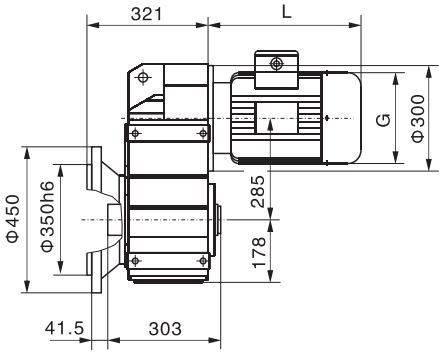

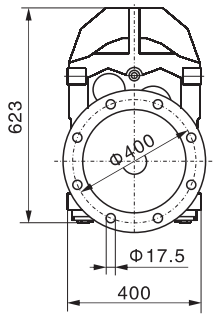

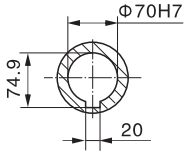

WFAZ97

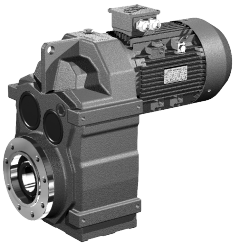

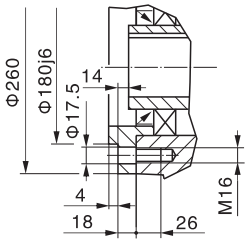

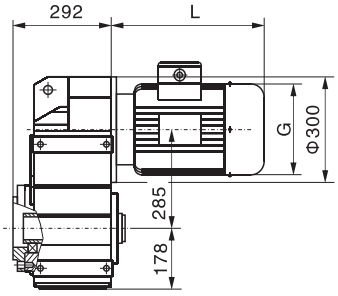

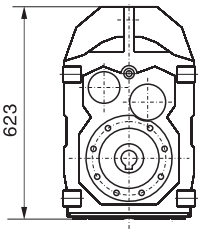

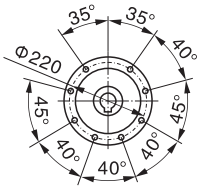

WF..97WR57

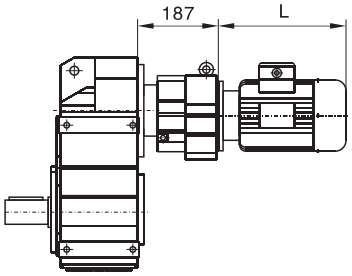

空心轴尺寸

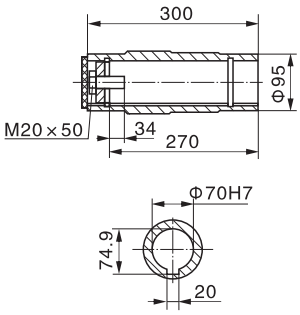

锁紧盘空心轴尺寸

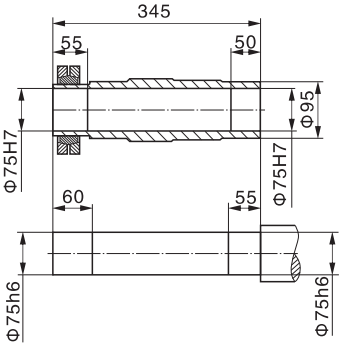

WF..S97

电机需方配或配特殊电机
时需加联接法兰（见第119页）

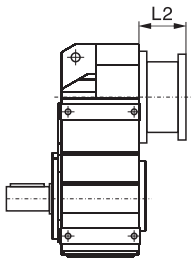

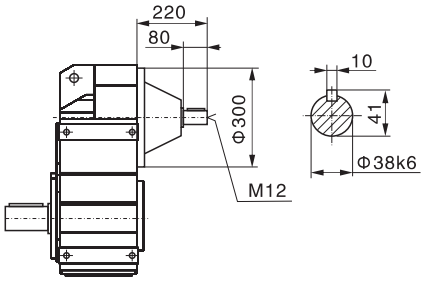

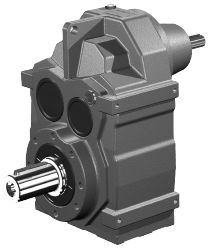

WF107

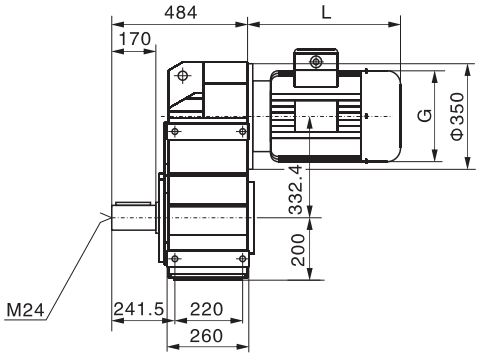

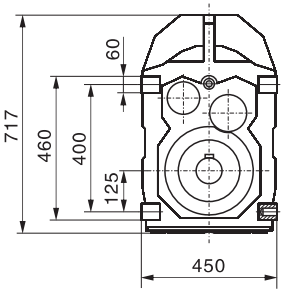

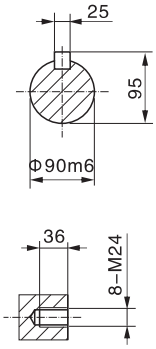

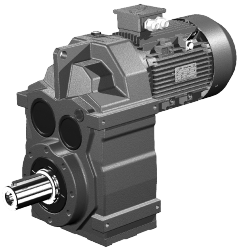

WFA107

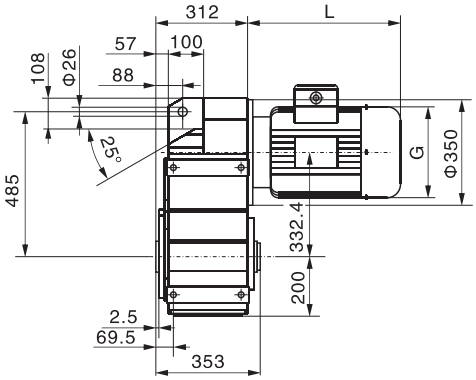

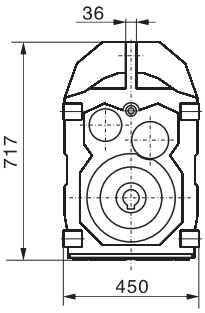

WF..T107

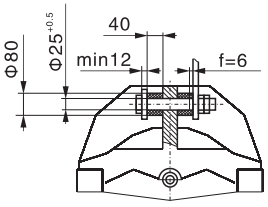

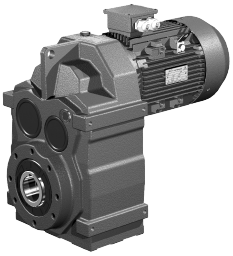

WFF107

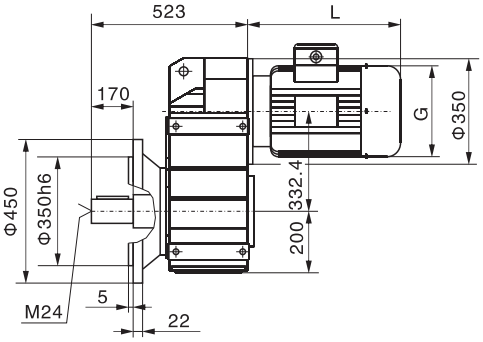

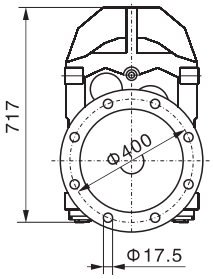

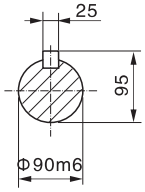

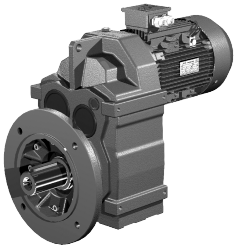

WFAF107

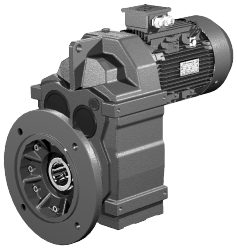

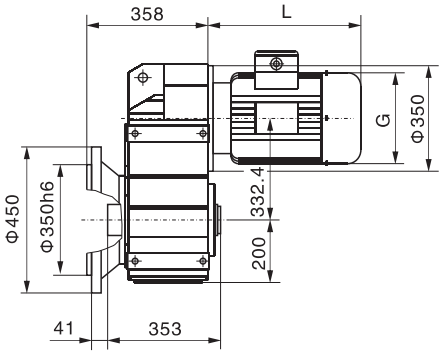

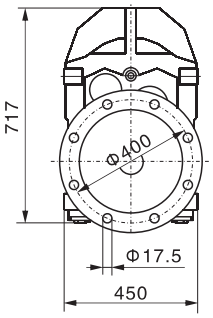

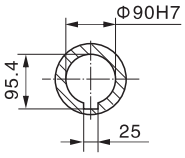

WFAZ107

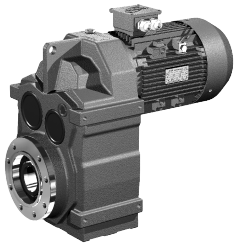

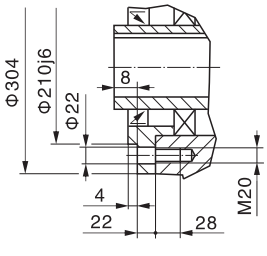

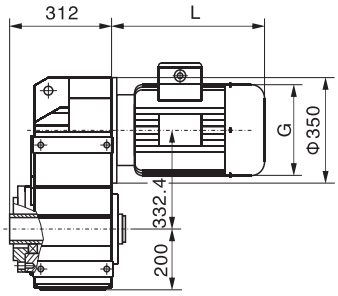

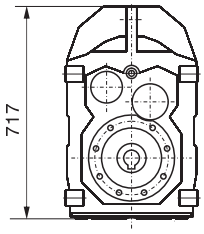

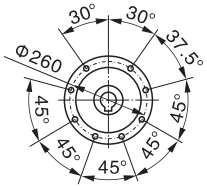

WF..107WR77

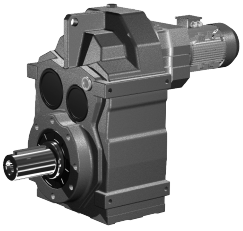

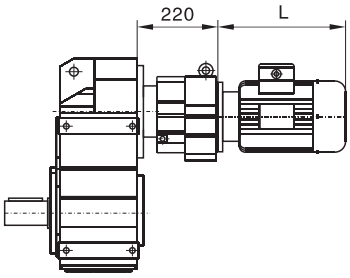

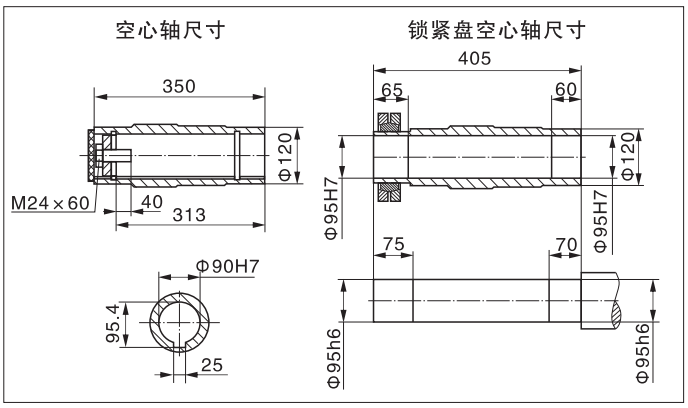

WF..S107

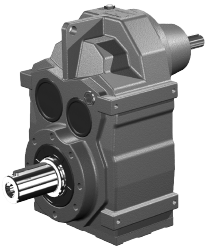

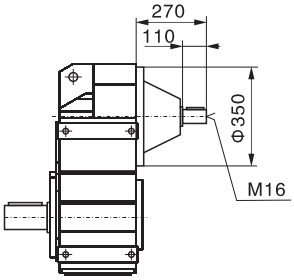

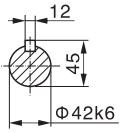

电机需方配或配特殊电机
时需加联接法兰（见第119页）

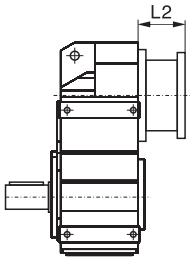

WF127

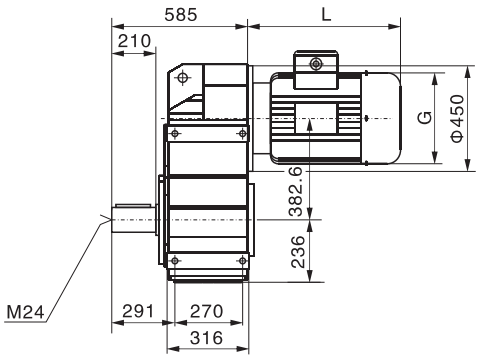

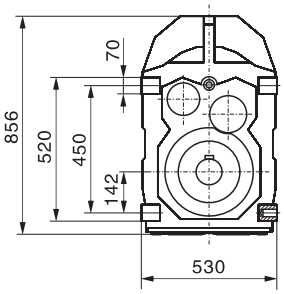

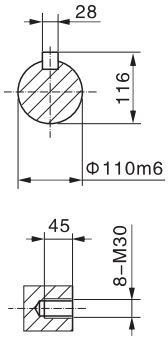

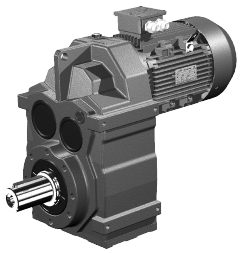

WFA127

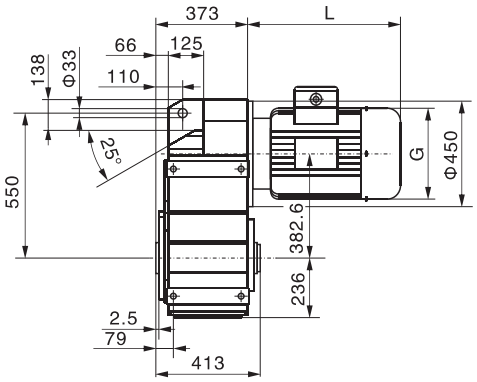

WF..T127

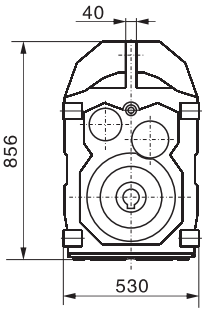

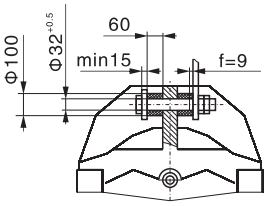

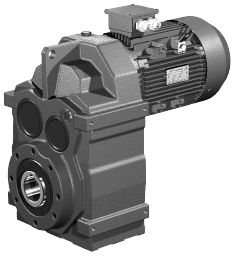

WFF127

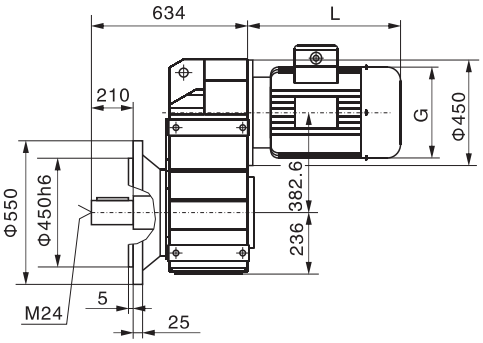

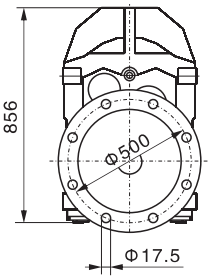

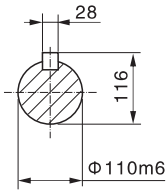

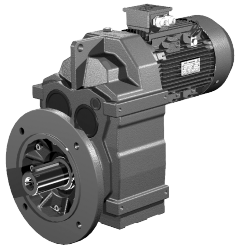

WFAF127

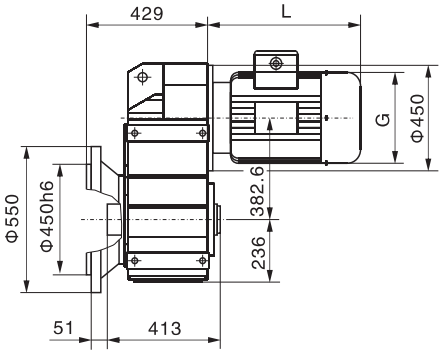

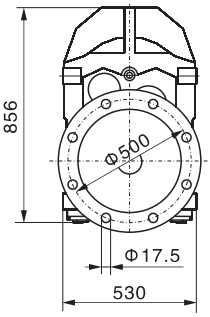

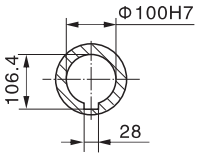

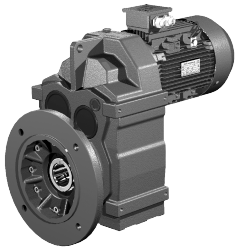

WFAZ127

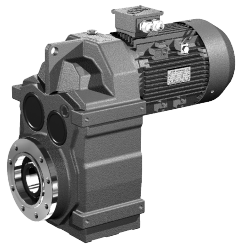

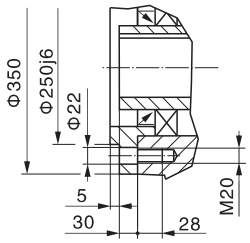

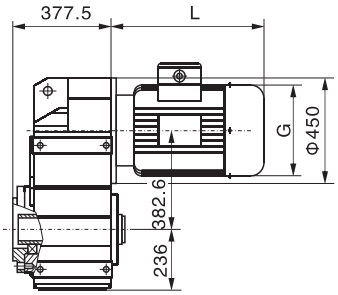

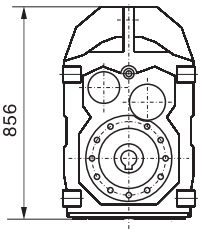

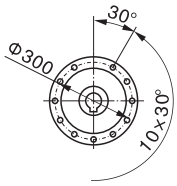

WF..127WR77(87)

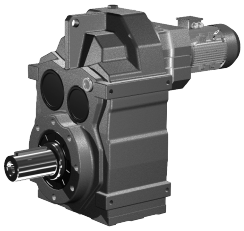

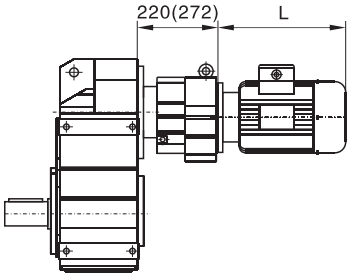

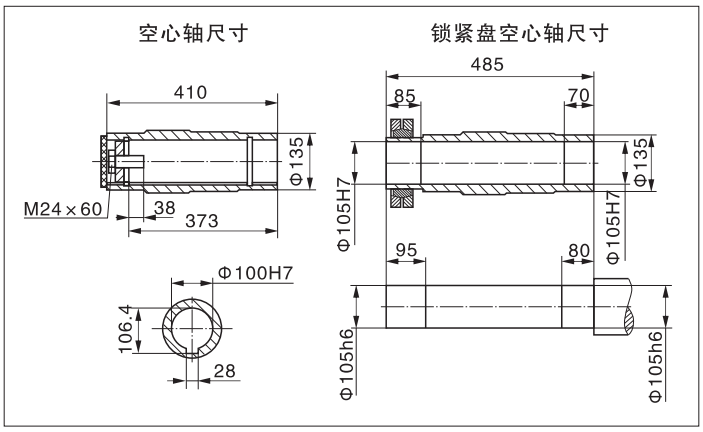

WF..S127

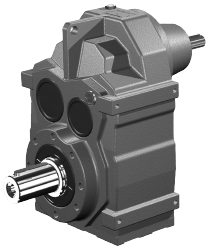

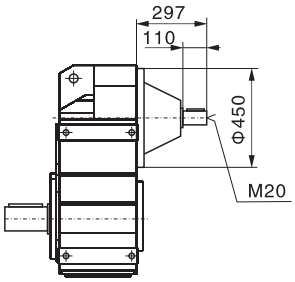

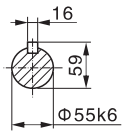

电机需方配或配特殊电机
时需加联接法兰（见第119页）

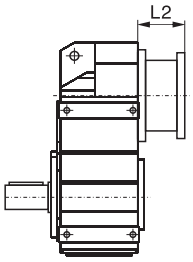

WF157

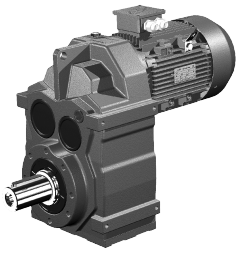

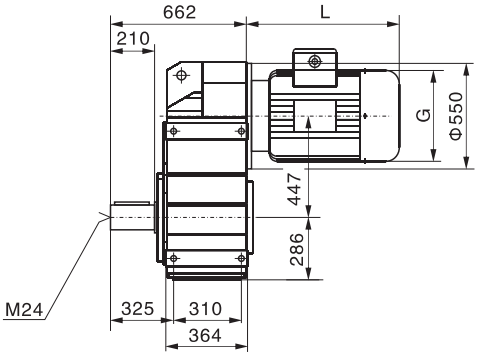

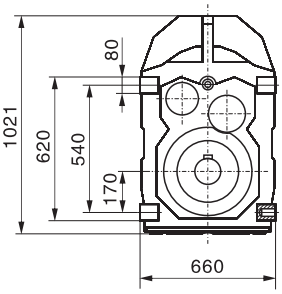

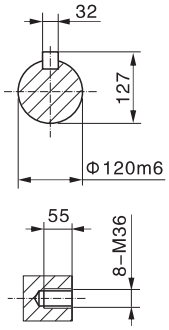

WFA157

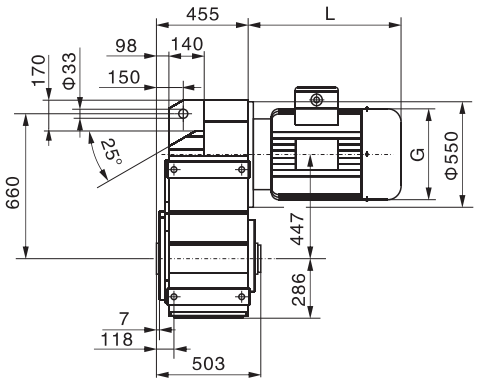

WF..T157

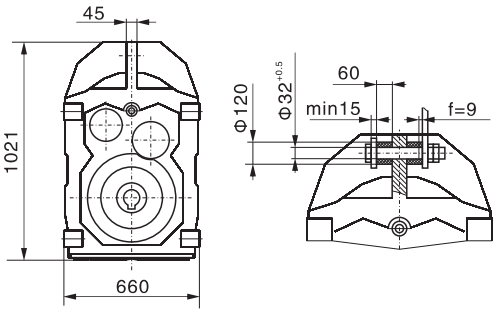

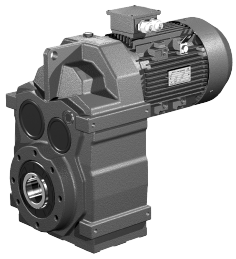

WFF157

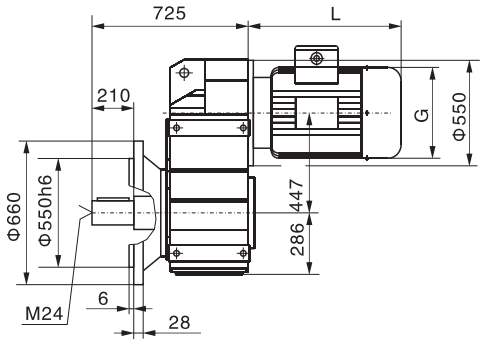

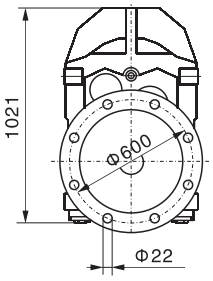

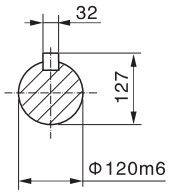

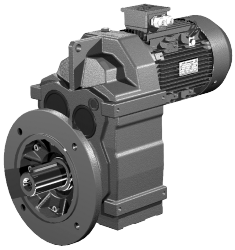

WFAF157

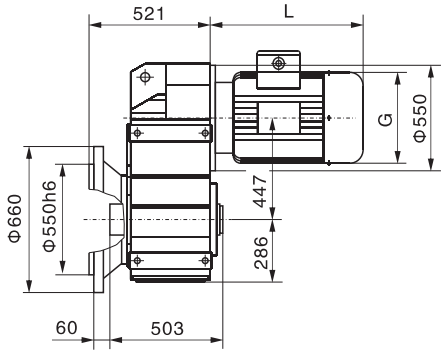

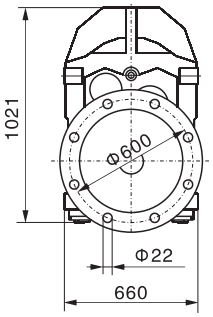

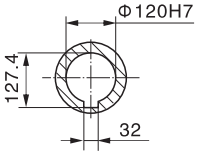

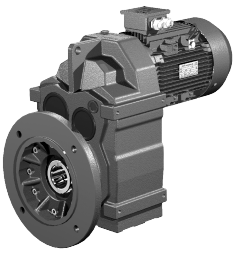

WFAZ157

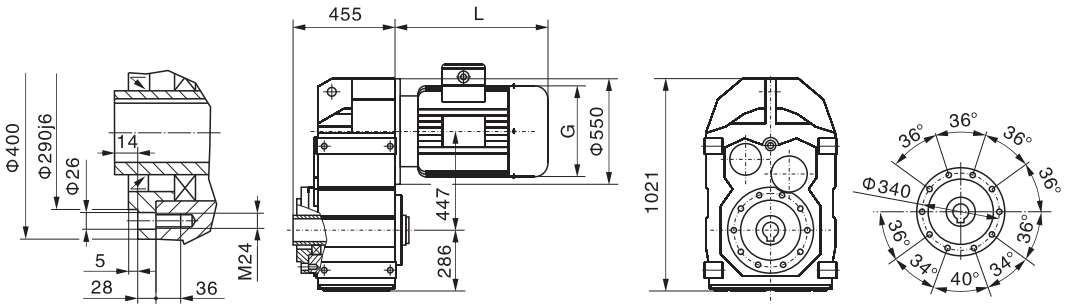

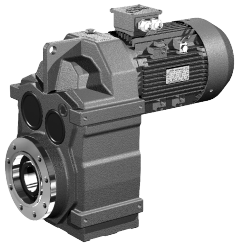

WF..157WR97

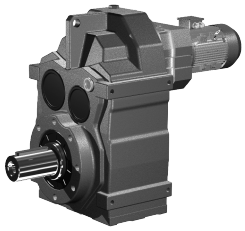

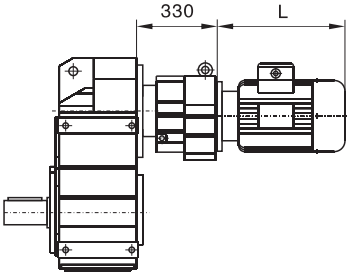

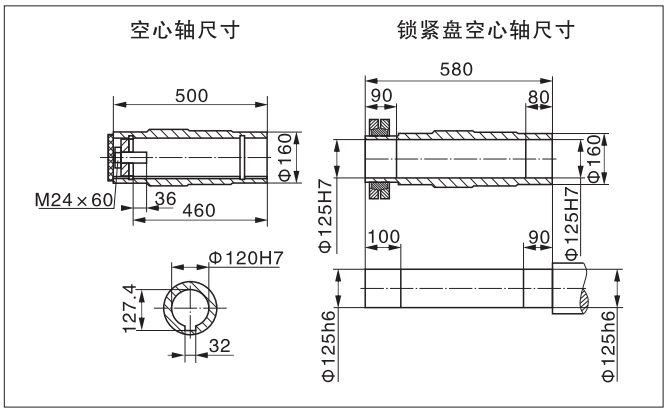

WF..S157

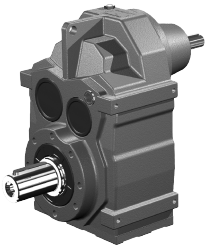

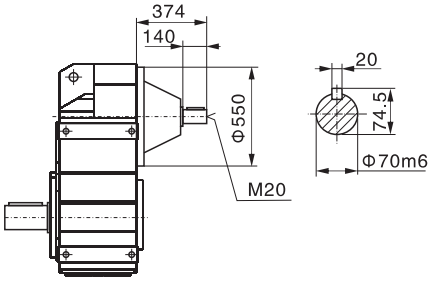

电机需方配或配特殊电机
时需加联接法兰（见第119页）

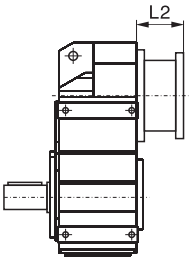

WF