NMRV63/150

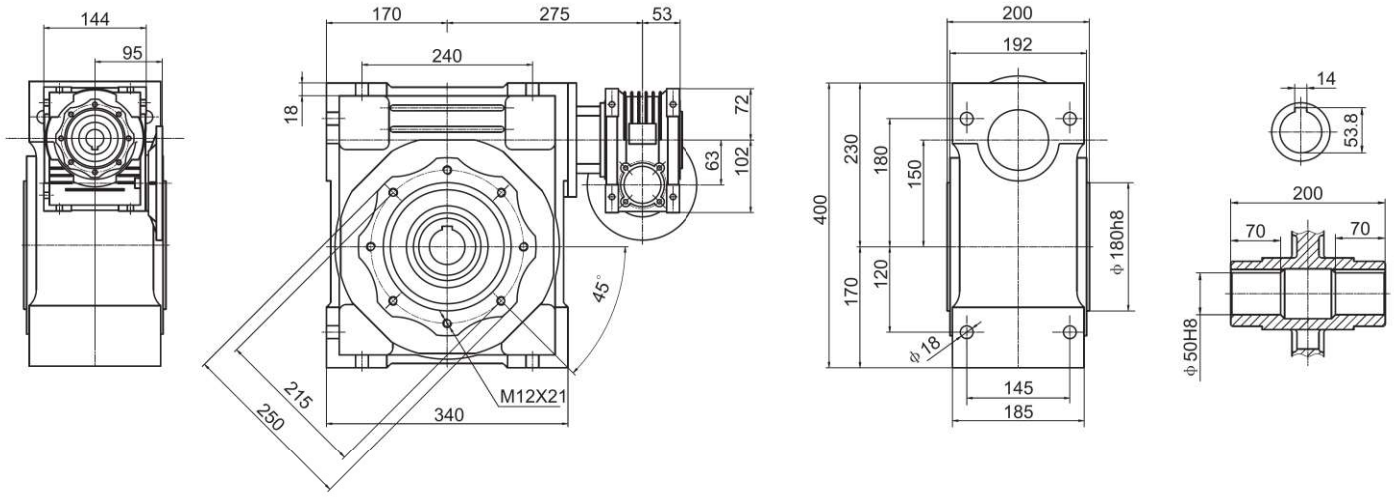
144
95
170
275
53
240
18
72
63
102
45°
215
250
340
M12X21
200
192
400
230
180
150
120
170
φ180h8
φ18
145
185
14
53.8
200
70
70
φ50H8

NMRV40/90

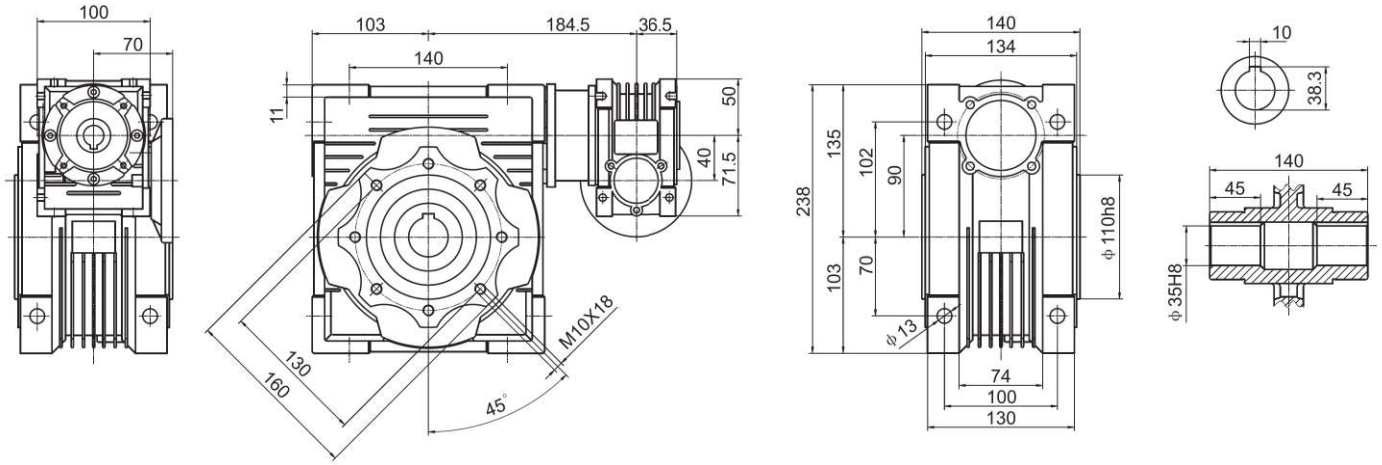

NMRV50/110

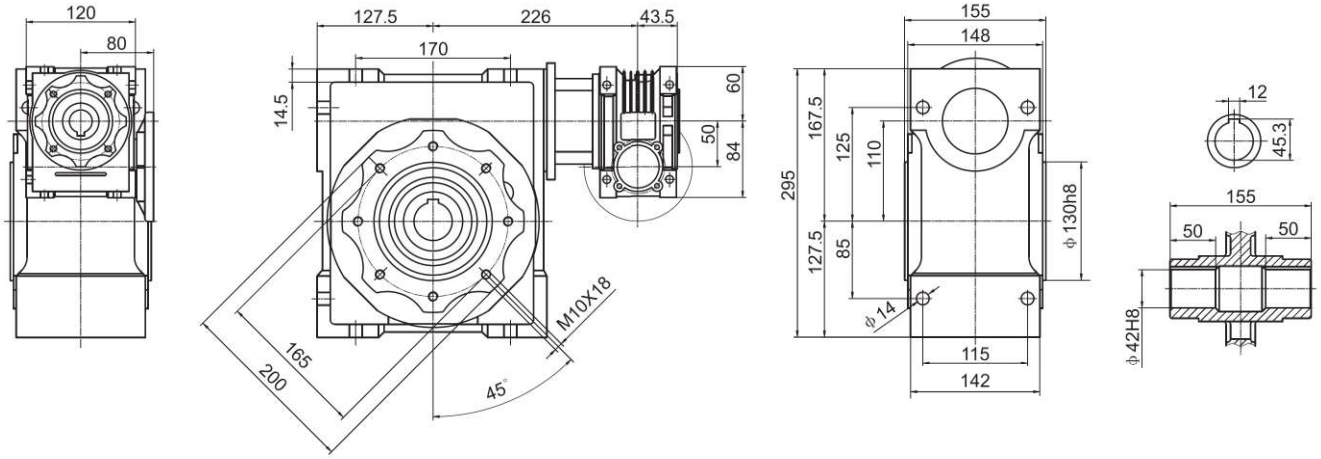

NMRV63/130

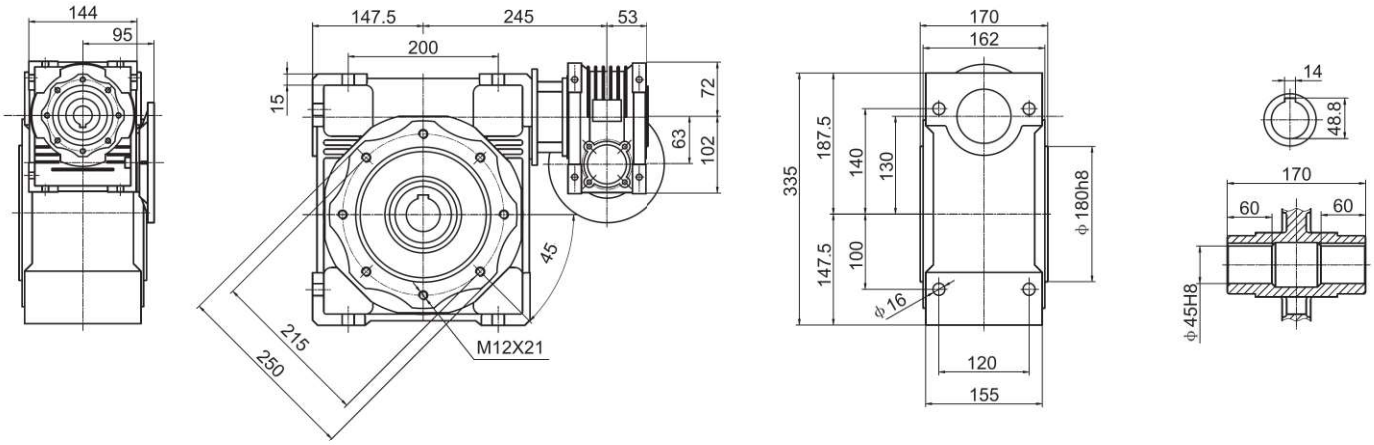

NMRV30/50

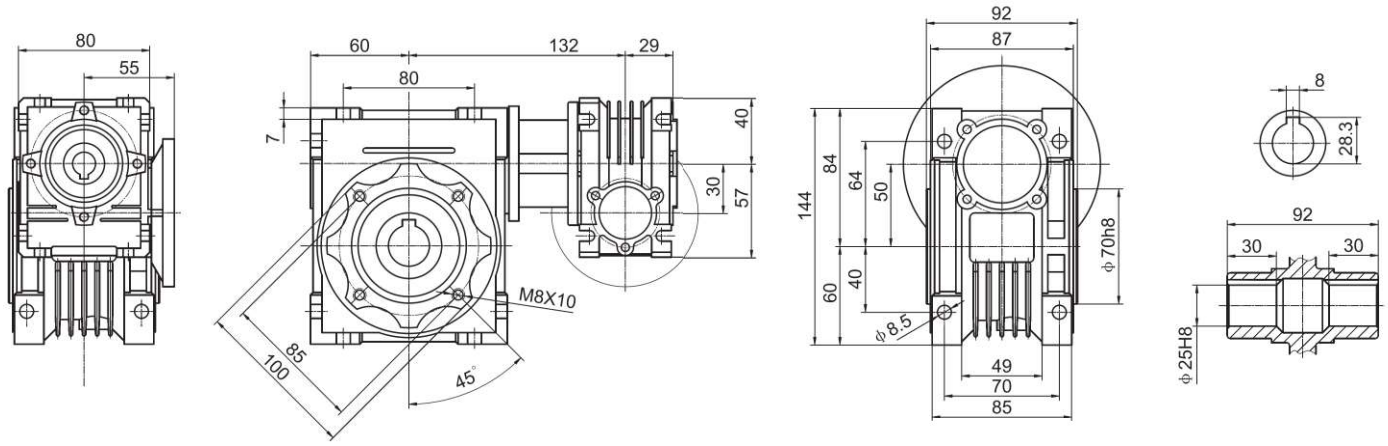

NMRV30/63

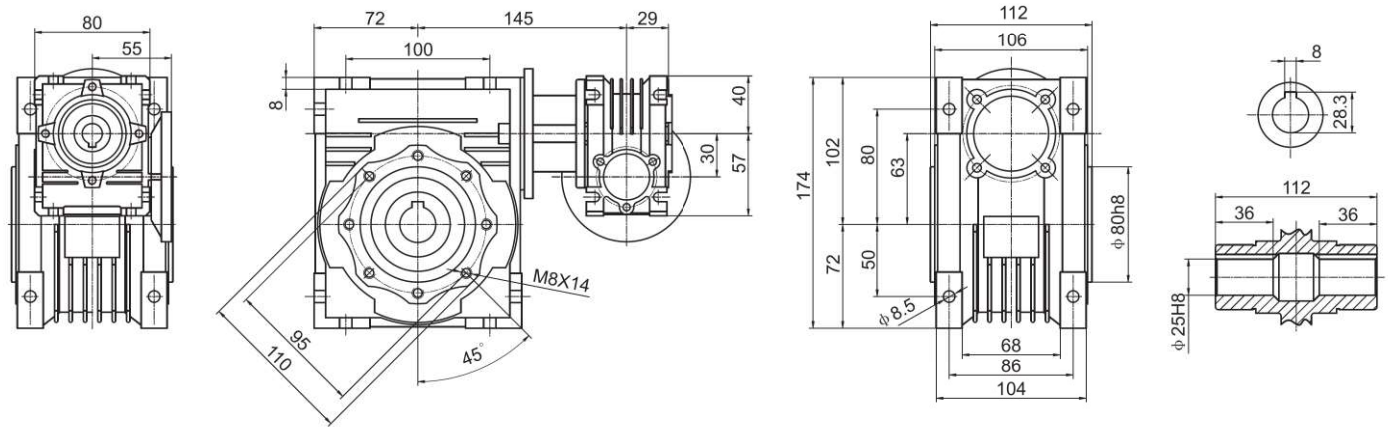

NMRV40/75

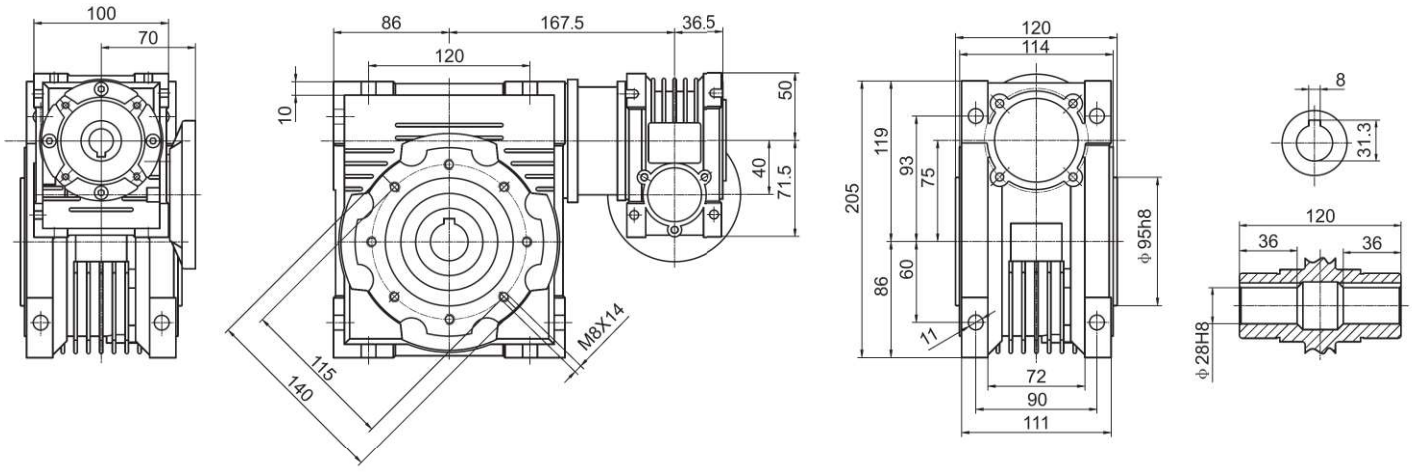

NMRV25/30

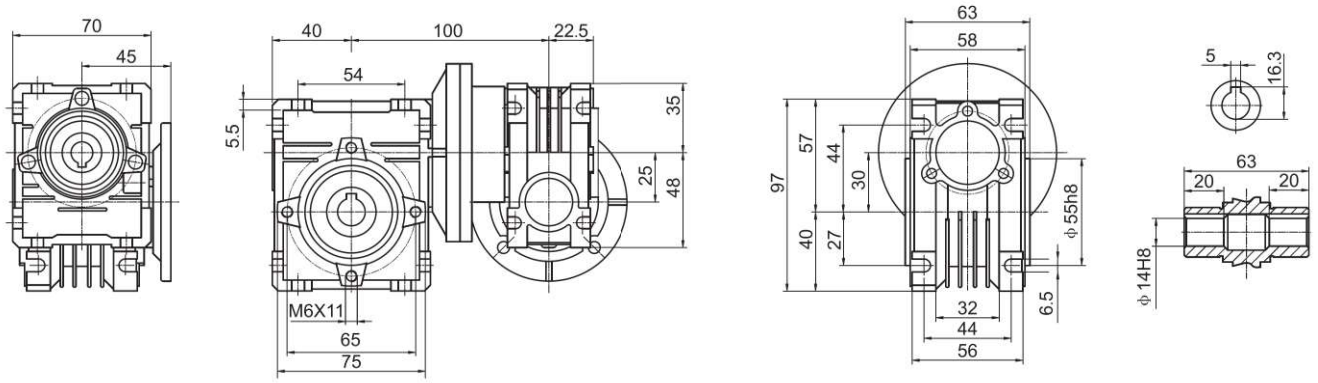

NMRV25/40

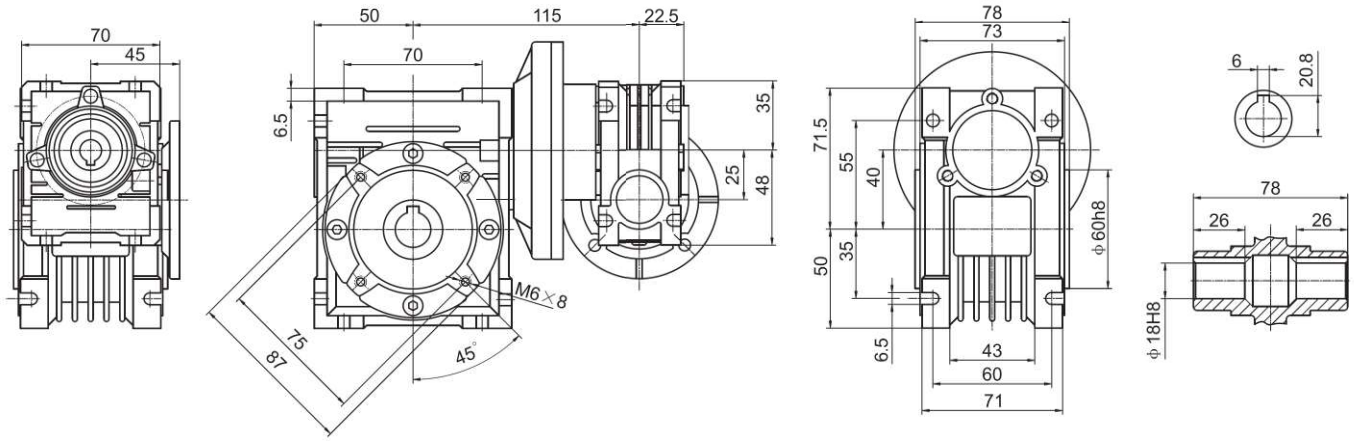

NMRV30/40

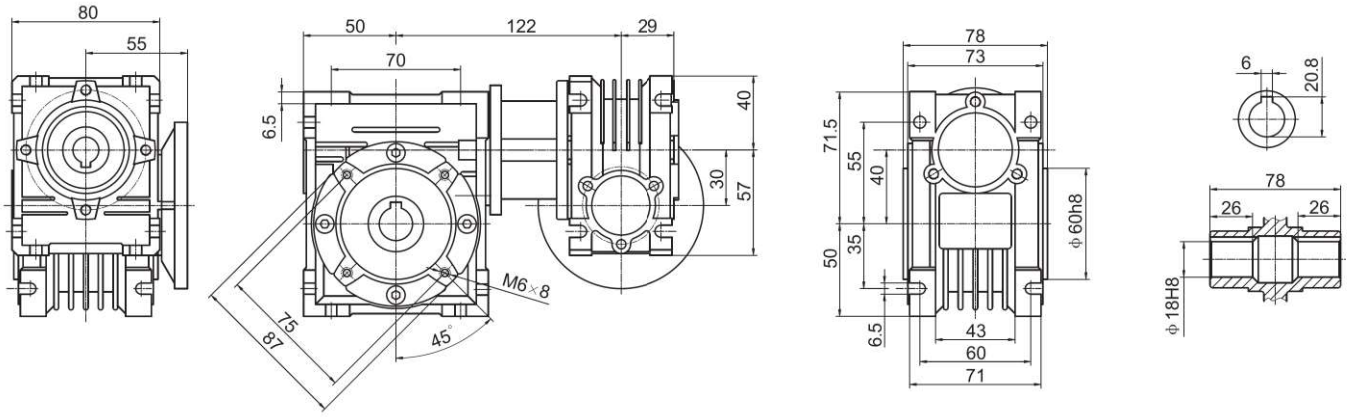

NMRV185

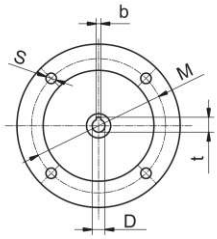

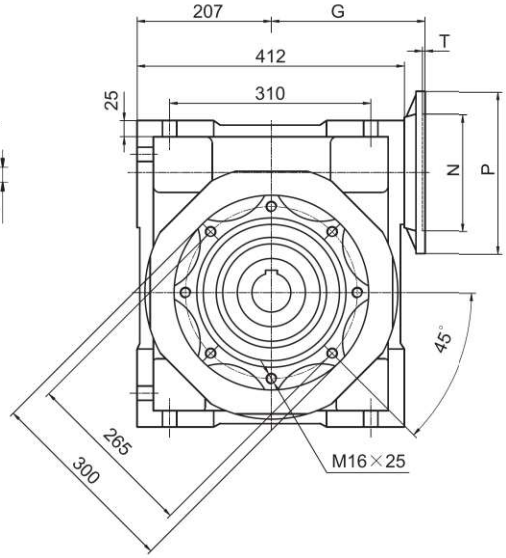

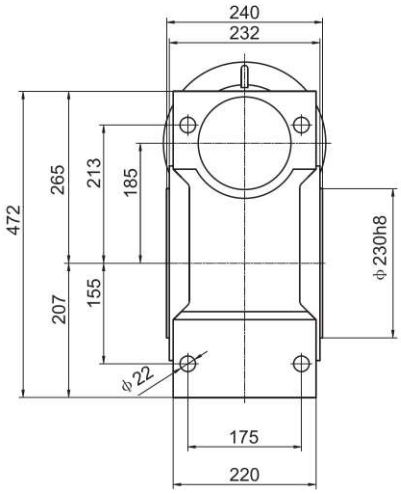

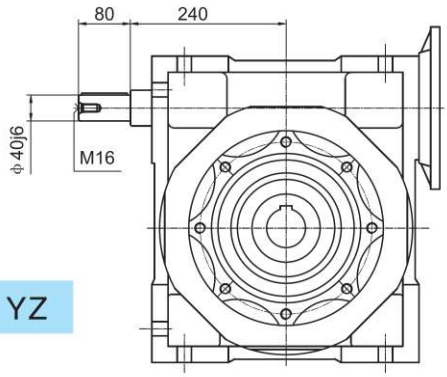

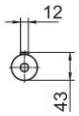

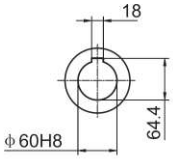

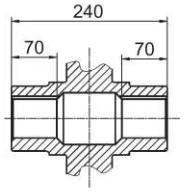

YZ

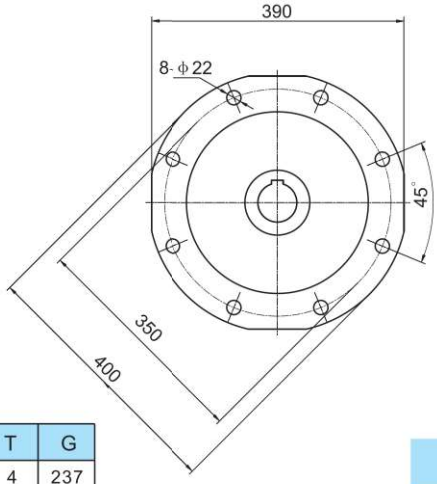

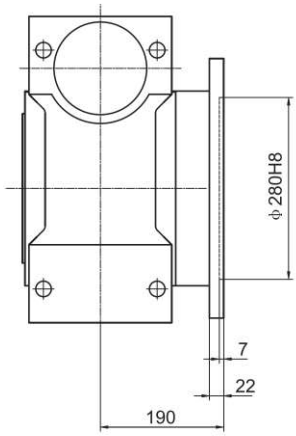

F

重量（不包含马达）≈200kg

Weight without motor ≈200kg

IEC	DE8	b	t	P	M	N	S	T	G
100/112B5	28	8	31.3	250	215	180	13.5	4	237
132B5	38	10	41.3	300	265	230	13.5	4.5	237
160B5	42	12	45.3	350	300	250	18	6	247
180B5	48	14	51.8	350	300	250	18	6	247

NMRV150

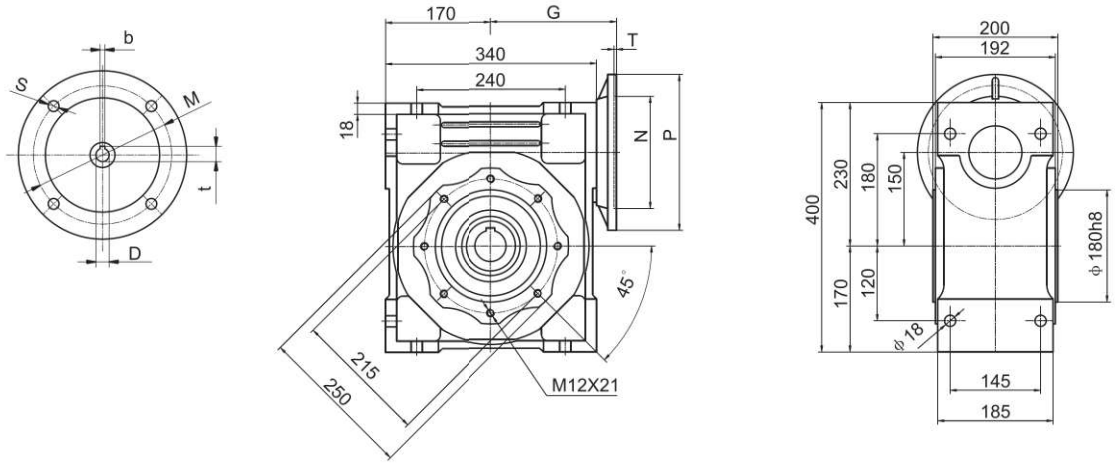

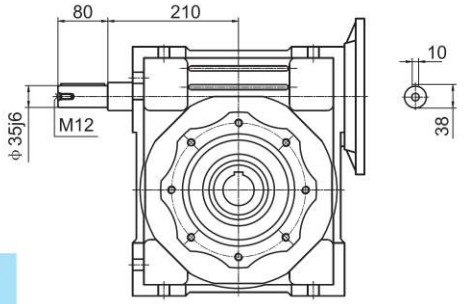

YZ

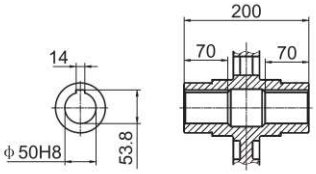

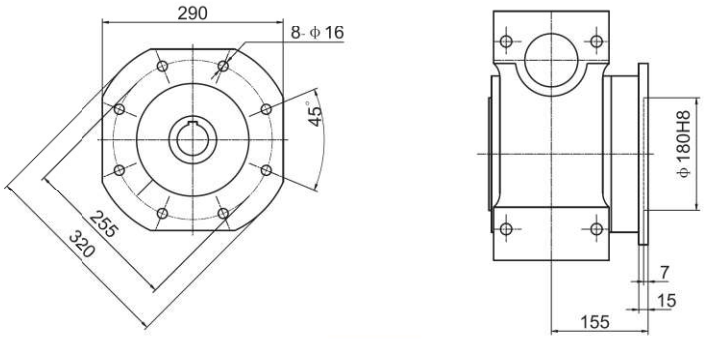

F

重量（不包含马达）≈105kg

Weight without motor ≈105kg

IEC	DE8	b	t	P	M	N	S	T	G
100/112B5	28	8	31.3	250	215	180	13.5	4	202
132B5	38	10	41.3	300	265	230	13.5	4.5	202
160B5	42	12	45.3	350	300	250	18	6	212

NMRV130

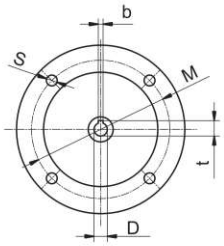

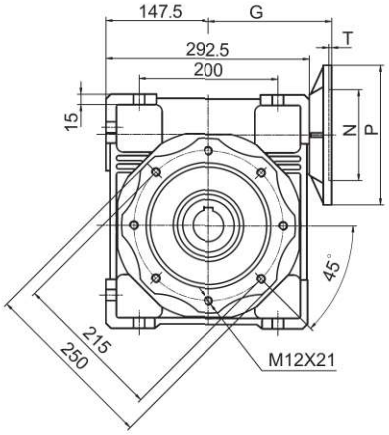

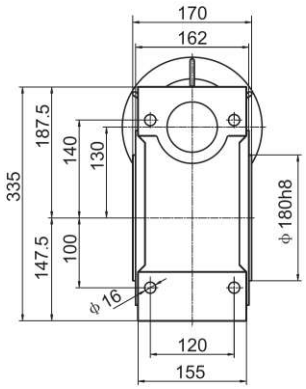

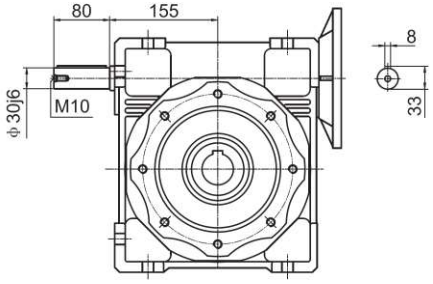

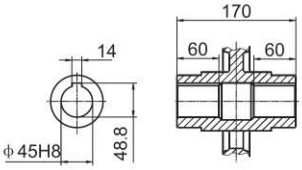

YZ

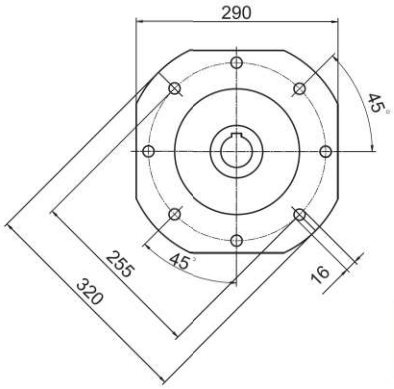

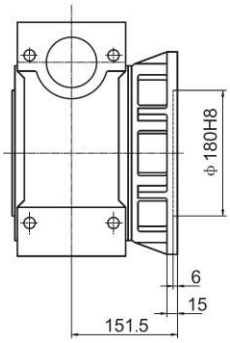

F

重量（不包含马达）≈55kg

Weight without motor ≈55kg

IEC	DE8	b	t	P	M	N	S	T	G
90B5	24	8	27.3	200	165	130	11	4	177
90B14	24	8	27.3	140	115	95	9	3.5	177
100/112B5	28	8	31.3	250	215	180	13.5	4	175
100/112B14	28	8	31.3	160	130	110	9	4.5	175
132B5	38	10	41.3	300	265	230	13.5	4.5	179

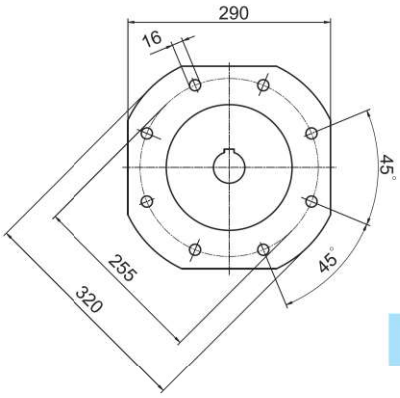

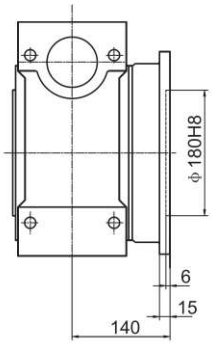

FA

NMRV110

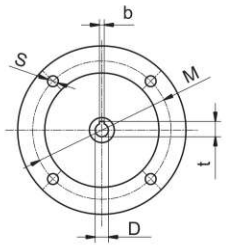

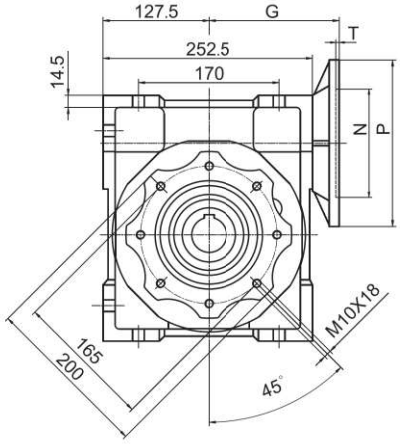

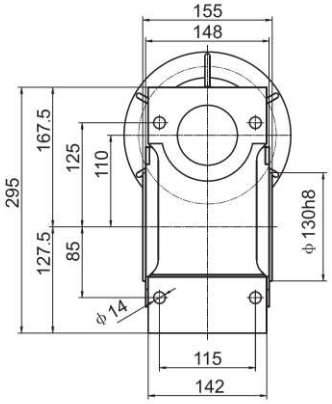

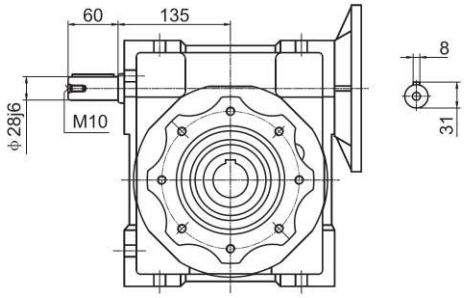

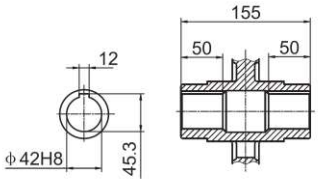

YZ

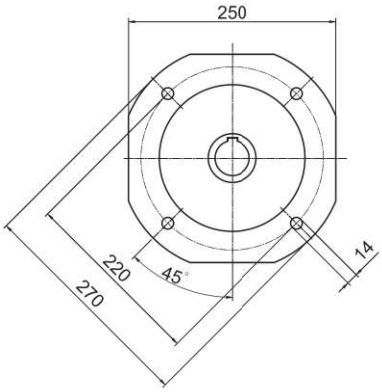

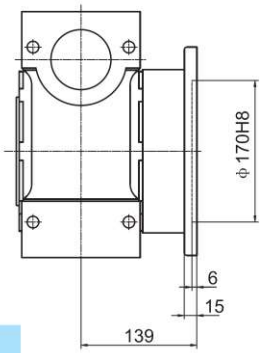

F

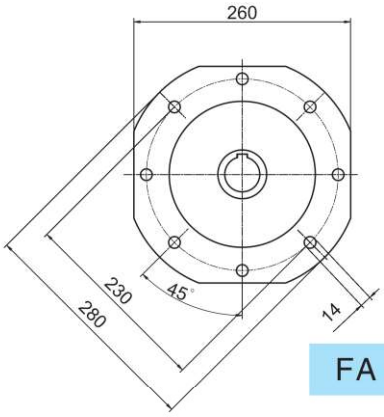

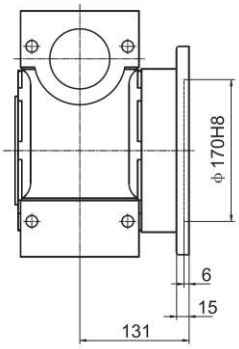

FA

重量（不包含马达）≈38kg

Weight without motor ≈38kg

IEC	DE8	b	t	P	M	N	S	T	G
90B5	24	8	27.3	200	165	130	11	4	157
90B14	24	8	27.3	140	115	95	9	3.5	157
100/112B5	28	8	31.3	250	215	180	13.5	4	155
100/112B14	28	8	31.3	160	130	110	9	4.5	155
132B5	38	10	41.3	300	265	230	13.5	4.5	159

NMRV90

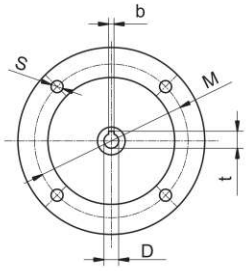

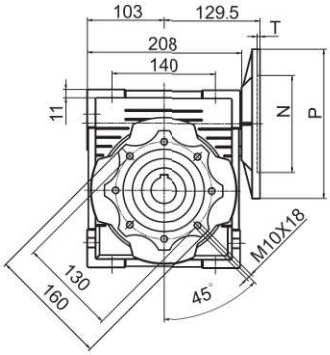

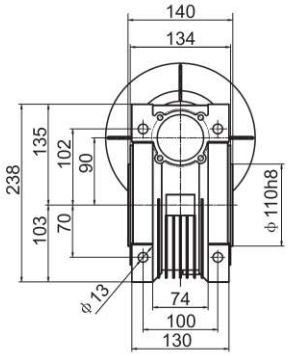

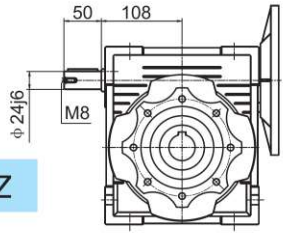

YZ

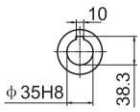

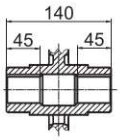

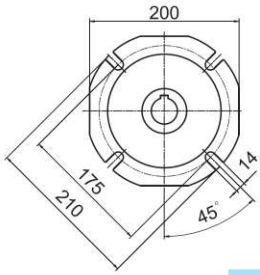

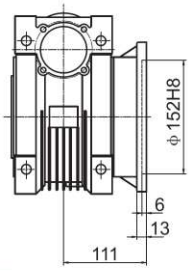

F

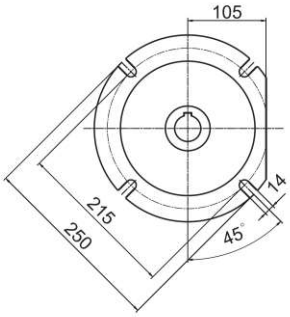

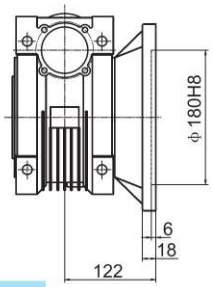

FB

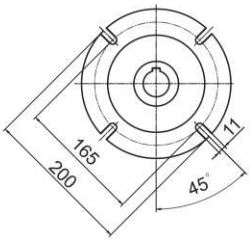

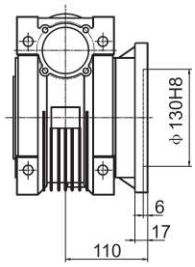

FC

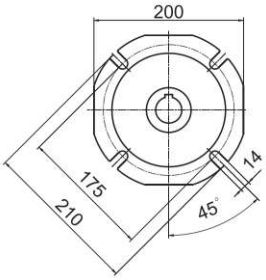

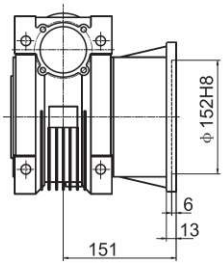

FD

IEC	DE8	b	t	P	M	N	S	T
80B5	19	6	21.8	200	165	130	11	4
80B14	19	6	21.8	120	100	80	6.5	3.5
90B5	24	8	27.3	200	165	130	11	4
90B14	24	8	27.3	140	115	95	9	3.5
100/112B5	28	8	31.3	250	215	180	13.5	4
100/112B14	28	8	31.3	160	130	110	9	4.5

重量（不包含马达）≈12kg

Weight without motor ≈12kg

NMRV75

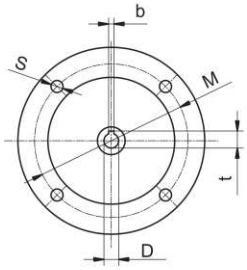

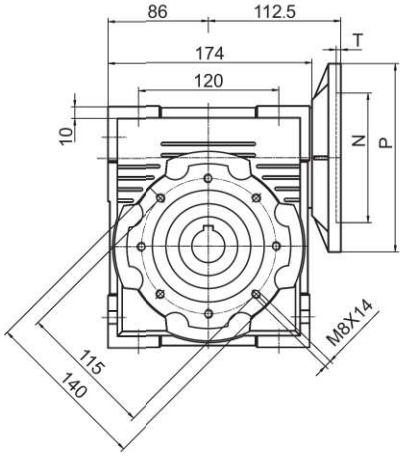

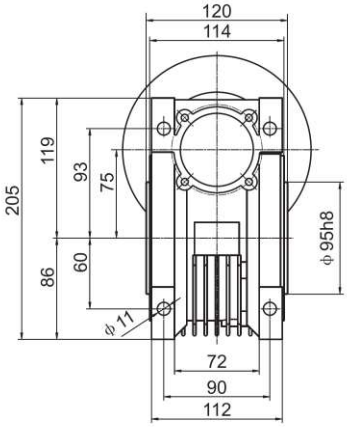

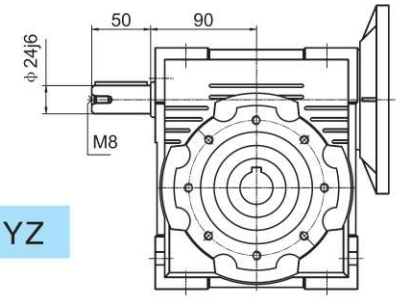

YZ

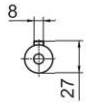

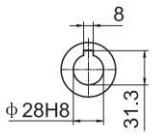

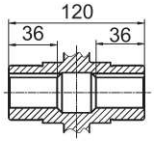

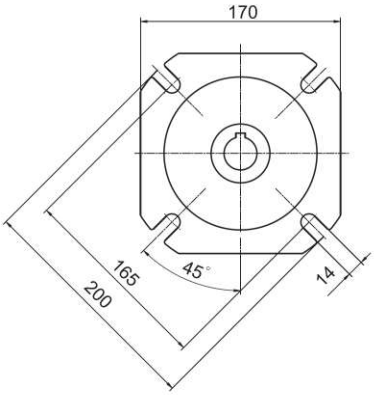

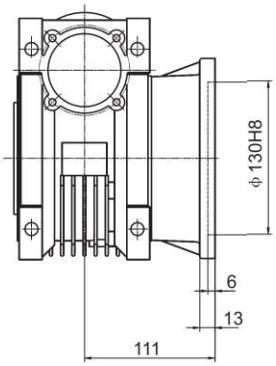

F

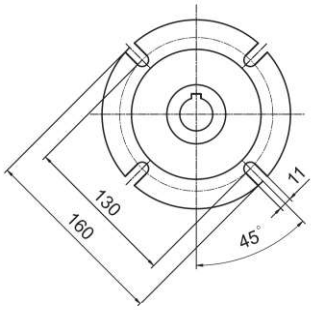

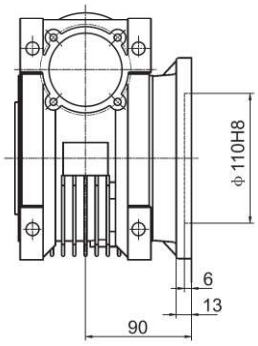

FB

IEC	DE8	b	t	P	M	N	S	T
80B5	19	6	21.8	200	165	130	11	4
80B14	19	6	21.8	120	100	80	6.5	3.5
90B5	24	8	27.3	200	165	130	11	4
90B14	24	8	27.3	140	115	95	9	3.5
100/112B5	28	8	31.3	250	215	180	13.5	4
100/112B14	28	8	31.3	160	130	110	9	4.5

重量（不包含马达）≈9kg

Weight without motor ≈9kg

NMRV63

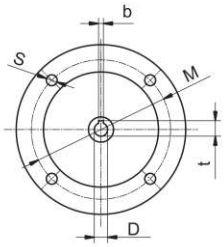

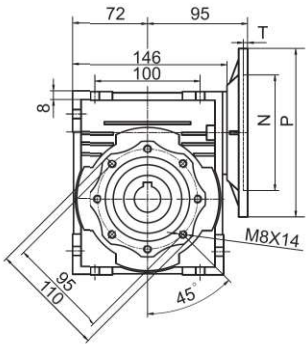

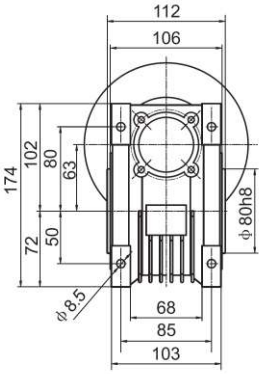

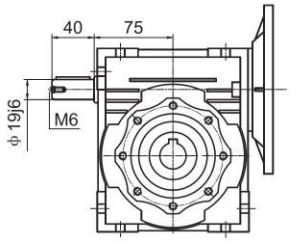

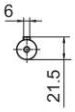

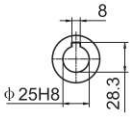

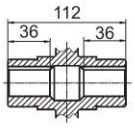

YZ

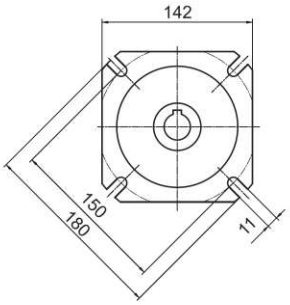

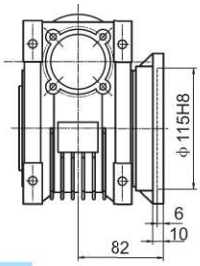

F

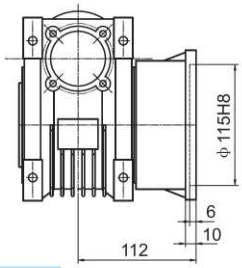

FL

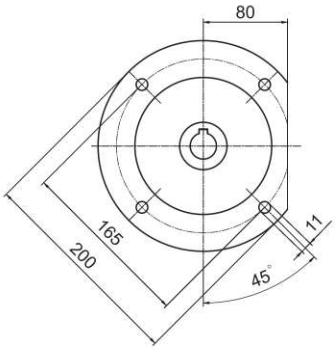

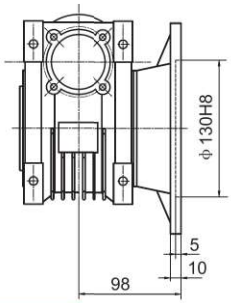

FC

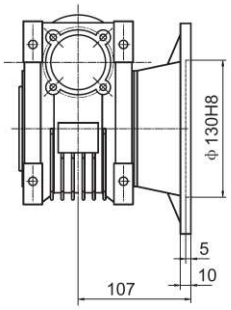

FD

重量（不包含马达）≈6.2kg

Weight without motor ≈6.2kg

IEC	DE8	b	t	P	M	N	S	T
71B5	14	5	16.3	160	130	110	9	4
71B14	14	5	16.3	105	85	70	7	3
80B5	19	6	21.8	200	165	130	11	4
80B14	19	6	21.8	120	100	80	7	3.5
90B5	24	8	27.3	200	165	130	11	4
90B14	24	8	27.3	140	115	95	9	3.5

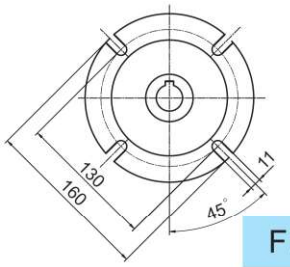

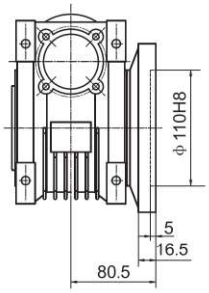

FE

NMRV50

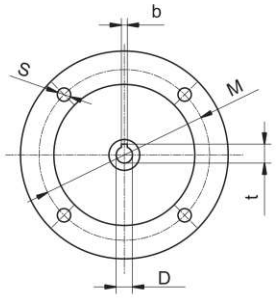

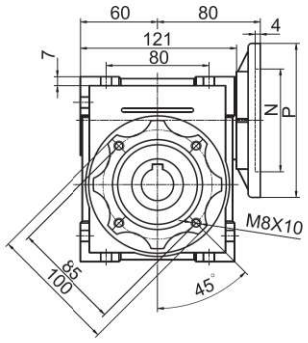

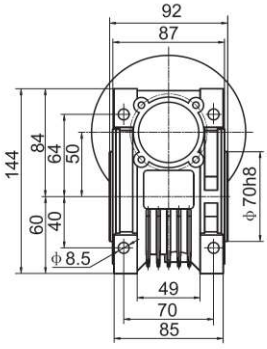

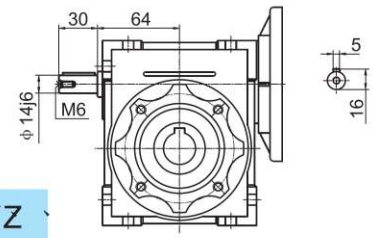

YZ

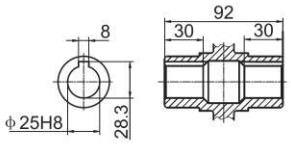

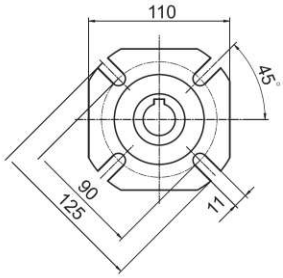

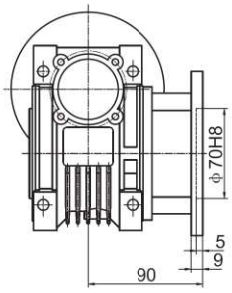

F

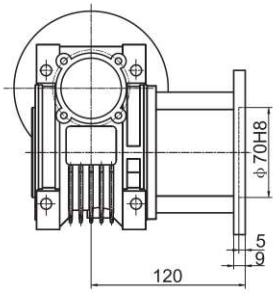

FL

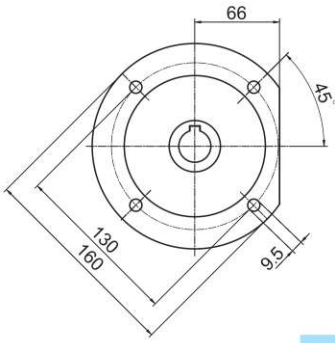

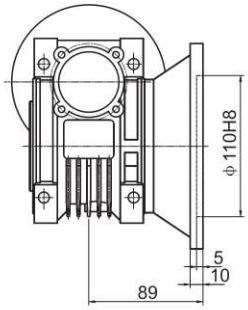

FC

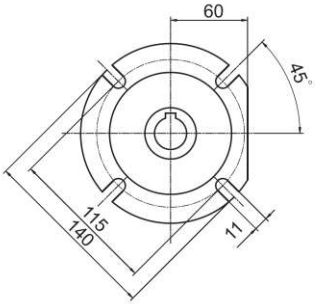

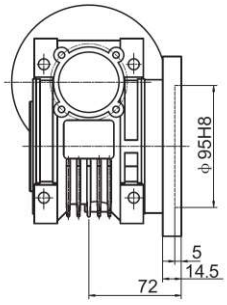

FD

IEC	DE8	b	t	P	M	N	S	T
63B14	11	4	12.8	90	75	60	5.5	3
63B5	11	4	12.8	140	115	95	9	3.5
71B5	14	5	16.3	160	130	110	9	4
71B14	14	5	16.3	105	85	70	7	3
80B5	19	6	21.8	200	165	130	11	4
80B14	19	6	21.8	120	100	80	7	3.5

重量（不包含马达）≈3.8kg

Weight without motor ≈3.8kg

NMRV40

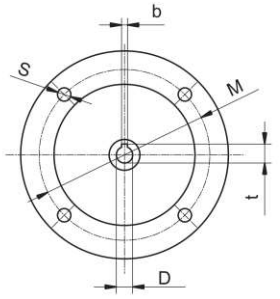

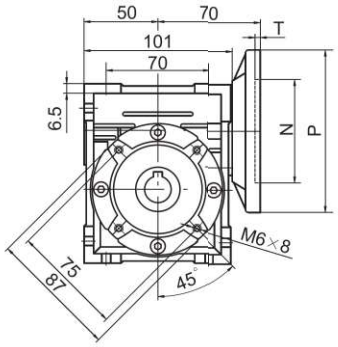

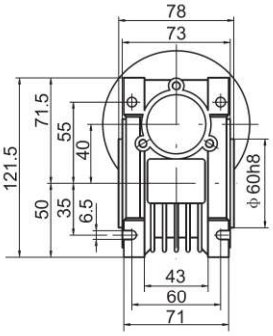

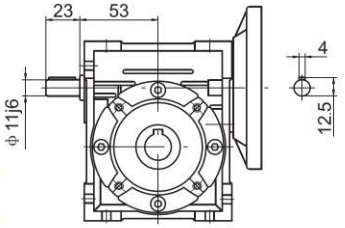

YZ

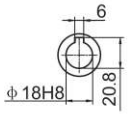

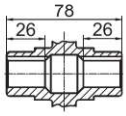

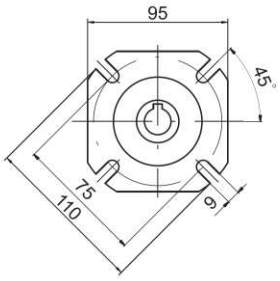

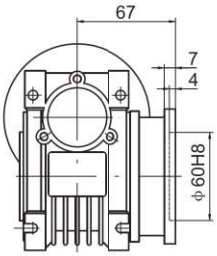

F

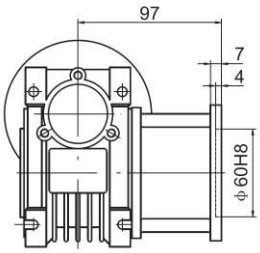

FL

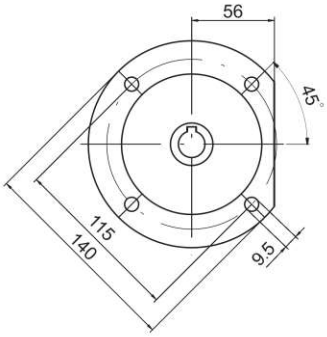

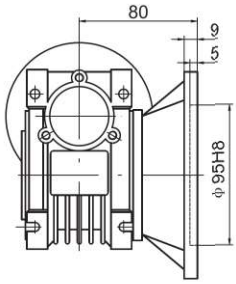

FC

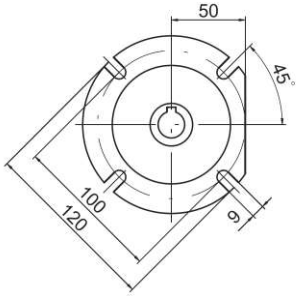

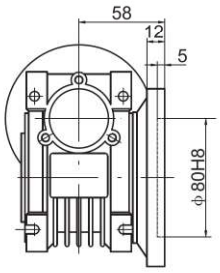

FD

IEC	DE8	b	t	P	M	N	S	T
56B5	9	3	10.4	80	65	50	5.5	3
63B5	11	4	12.8	140	115	95	9	3.5
63B14	11	4	12.8	90	75	60	5.5	3
71B5	14	5	16.3	160	130	110	9	4
71B14	14	5	16.3	105	85	70	7	3

重量（不包含马达）≈2.2kg

Weight without motor ≈2.2kg

NMRV30

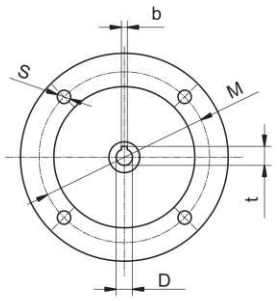

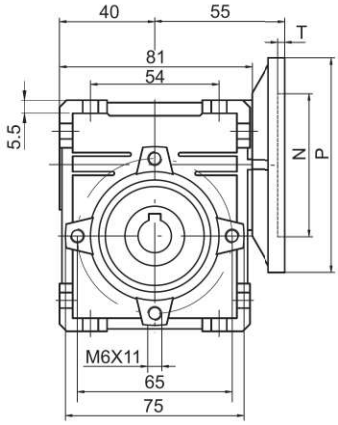

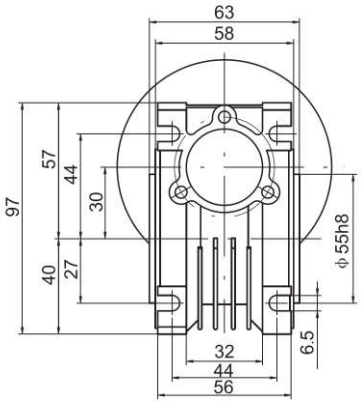

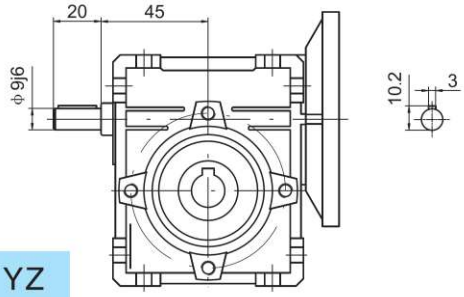

YZ

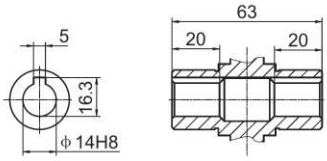

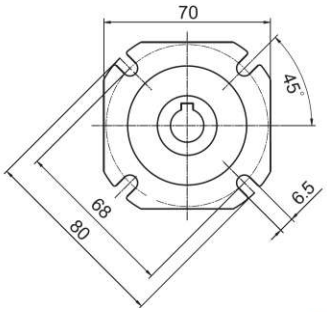

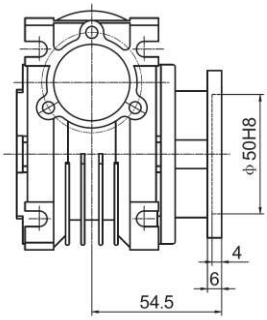

F

IEC	DE8	b	t	P	M	N	S	T
56B5	9	3	10.4	80	65	50	5.5	3
56B14	9	3	10.4	80	65	50	5.5	3
63B14	11	4	12.8	90	75	60	5.5	3
63B5	11	4	12.8	140	115	95	9	3.5

重量（不包含马达）≈1.2kg

Weight without motor ≈1.2kg

外形尺寸图 / OUTLINE DIMENSION SHEET

NMRV25

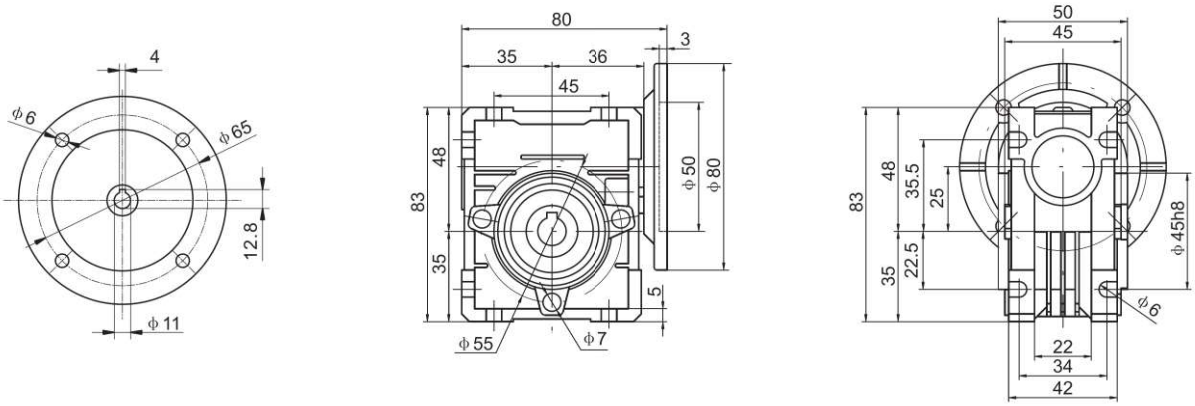

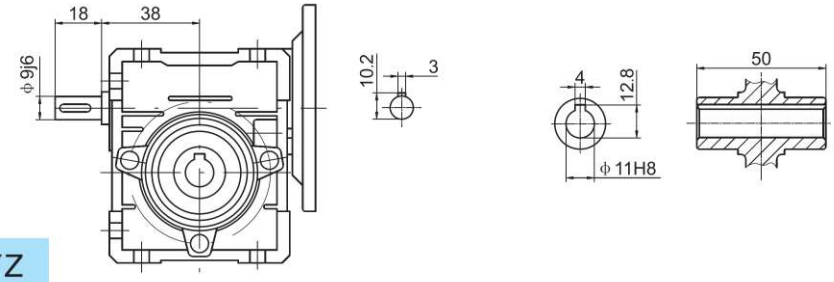

YZ

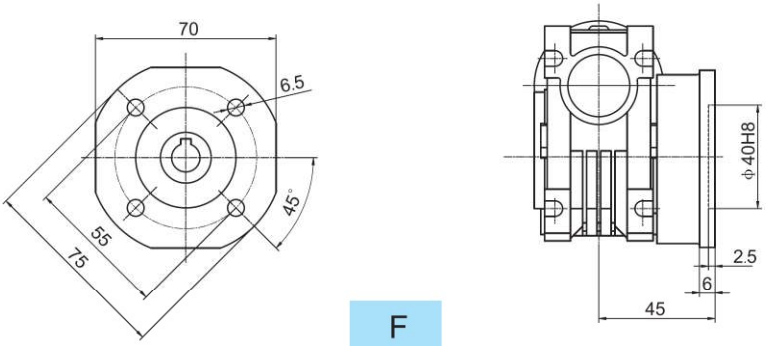

F

重量（不包含马达）≈0.8kg

Weight without motor ≈0.8kg

输出转速 Output speed (r/min)	输出转矩 Output torque (N.m)	使用系数 (fs)	高速级传动比 High speed transmission ratio (i1)	低速级传动比 Low speed transmission ratio (i2)	总传动比 General transmission ratio (i)	组合机型规格 Combination model size
1.5kW						
4.7	1789	1.0	10	30	300	63/130
3.5	2279	0.7	10	40	400	
9.3	1026	2.3	10	15	150	63/150
7	1317	1.8	10	20	200	
5.6	1602	1.3	10	25	250	
4.7	1860	1.3	10	30	300	
3.5	2208	1.2	10	40	400	
2.8	2582	0.9	10	50	500	
2.3	3057	0.9	15	40	600	

输出转速 Output speed (r/min)	输出转矩 Output torque (N.m)	使用系数 (fs)	高速级传动比 High speed transmission ratio (i1)	低速级传动比 Low speed transmission ratio (i2)	总传动比 General transmission ratio (i)	组合机型规格 Combination model size
0.12kW						
1.6	324	1.2	30	30	900	40/75
1.2	399	0.9	30	40	1200	
0.78	546	0.9	30	60	1800	40/90
0.58	695	0.9	60	40	2400	
0.5	883	1.2	60	50	3000	50/110
0.35	784	1.0	50	80	4000	
0.28	928	0.8	50	100	5000	
0.18kW						
3.5	221	1.0	10	40	400	30/63
2.8	257	0.8	10	50	500	
2.3	362	1.1	20	30	600	40/75
1.9	435	0.9	25	30	750	
1.6	487	0.8	30	30	900	
1.2	629	1.0	30	40	1200	40/90
0.93	735	0.8	30	50	1500	
0.78	860	1.5	60	30	1800	50/110
0.58	1113	1.1	60	40	2400	
0.25kW						
3.5	336	1.1	10	40	400	40/75
2.8	384	0.8	10	50	500	
2.3	511	1.2	15	40	600	40/90
1.9	598	0.9	15	50	750	
1.6	667	0.8	15	60	900	
1.2	943	1.3	30	40	1200	50/110
0.93	1064	1.2	50	30	1500	
0.78	1195	1.1	60	30	1800	
0.6	1624	1.0	60	40	2400	63/130
0.47	1935	0.8	60	50	3000	
0.35	2046	0.6	50	80	4000	
0.28	2430	0.5	50	100	5000	
0.78	1199	1.8	60	30	1800	63/150
0.6	1446	1.8	60	40	2400	
0.5	1713	1.4	60	50	3000	
0.4	2026	0.9	50	80	4000	
0.3	2251	0.7	50	100	5000	
0.37kW						
4.7	405	1.0	10	30	300	40/75
3.5	498	0.7	10	40	400	
4.7	401	1.5	7.5	40	300	40/90
3.5	523	1.2	10	40	400	
2.8	611	0.9	10	50	500	
2.3	757	0.8	15	40	600	

输出转速 Output speed (r/min)	输出转矩 Output torque (N.m)	使用系数 (fs)	高速级传动比 High speed transmission ratio (i1)	低速级传动比 Low speed transmission ratio (i2)	总传动比 General transmission ratio (i)	组合机型规格 Combination model size
0.25kW						
1.9	949	1.3	25	30	750	50/110
1.6	1079	1.2	30	30	900	
1.2	1396	0.8	30	40	1200	
0.9	1674	1.1	50	30	1500	63/130
0.78	1887	0.9	60	30	1800	
0.78	1774	1.2	60	30	1800	63/150
0.6	2141	1.2	60	40	2400	
0.5	2535	0.9	60	50	3000	
0.55kW						
4.7	639	2.0	10	30	300	50/110
3.5	826	1.4	10	40	400	
2.8	984	1.1	10	50	500	
2.3	1181	1.0	15	40	600	
1.9	1411	0.9	25	30	750	
2.8	995	1.6	10	50	500	63/130
1.9	1470	1.2	25	30	750	
1.2	2132	0.8	30	40	1200	
0.78	2637	0.8	60	30	1800	63/150
0.6	3182	0.8	60	40	2400	
0.75kW						
4.7	871	1.5	10	30	300	50/110
3.5	1126	1.1	10	40	400	
2.8	1357	1.1	10	50	500	63/130
2.3	1631	1.0	15	40	600	
1.9	2005	0.9	25	30	750	
1.6	2283	0.8	30	30	900	
2.8	1290	1.8	10	50	500	63/150
2.3	1529	1.7	15	40	600	
1.9	1783	1.3	25	30	750	
1.6	2215	0.9	30	30	900	
1.2	2680	1.0	30	40	1200	
1.1 kW						
4.7	1312	1.3	10	30	300	63/130
3.5	1671	1.0	10	40	400	
2.8	1991	0.8	10	50	500	
9.3	752	3.1	10	15	150	63/150
7	966	2.4	10	20	200	
5.6	1175	1.7	10	25	250	
4.7	1364	1.7	10	30	300	
3.5	1619	1.6	10	40	400	
2.8	1893	1.2	10	50	500	
2.3	2242	1.2	15	40	600	
1.9	2616	0.9	25	30	750	

双级减速机（法兰输入，输入转速1400r/min)/(配4级电机)
Double step reducer(flange input,input speed is 1400r/min)/(matched with 4 poles moter)

输出转速 Output speed (r/min)	输出转矩 Output torque (N.m)	使用系数 (fs)	高速级传动比 High speed transmission ratio (i1)	低速级传动比 Low speed transmission ratio (i2)	总传动比 General transmission ratio (i)	组合机型规格 Combination model size
0.06kW						
14	25	1.3	10	10	100	25/30
9.3	32	0.9	10	15	150	
7	41	0.7	10	20	200	
5.6	44	0.8	10	25	250	
4.7	59	1.2	10	30	300	25/40
3.5	71	0.9	10	40	400	
2.8	82	0.7	20	25	500	
2.3	101	0.6	20	30	600	
1.9	116	0.5	25	30	750	
1.6	143	0.5	30	30	900	
1.2	171	0.4	30	40	1200	
0.9	197	0.3	50	30	1500	
0.78	217	0.3	60	30	1800	
0.6	268	0.2	60	40	2400	
0.5	324	0.2	60	50	3000	
0.4	294	0.1	50	80	4000	
0.3	356	0.1	50	100	5000	
4.7	57	1.3	10	30	300	30/40
3.5	70	0.9	10	40	400	
2.8	96	0.6	20	25	500	
2.3	104	0.7	20	30	600	
1.9	121	0.6	25	30	750	
1.6	139	0.5	30	30	900	
1.2	166	0.4	30	40	1200	
0.9	196	0.4	50	30	1500	
0.78	218	0.3	60	30	1800	
0.58	261	0.2	60	40	2400	
0.4	300	0.2	80	40	3200	
0.4	279	0.1	50	80	4000	
0.28	338	0.1	50	100	5000	
1.6	141	1.0	30	30	900	30/50
1.2	169	0.7	30	40	1200	
0.93	199	0.7	50	30	1500	
0.78	222	0.7	60	30	1800	
0.6	266	0.5	60	40	2400	
0.5	307	0.4	60	50	3000	
0.35	288	0.3	50	80	4000	
0.29	311	0.3	60	80	4800	
0.9	203	1.1	30	50	1500	30/63
0.78	225	0.9	30	60	1800	
0.58	276	0.8	60	40	2400	
0.47	319	0.7	60	50	3000	
0.35	306	0.6	50	80	4000	
0.28	360	0.4	50	100	5000	
0.6	330	1.1	60	40	2400	40/75
0.47	377	0.8	60	50	3000	

输出转速 Output speed (r/min)	输出转矩 Output torque (N.m)	使用系数 (fs)	高速级传动比 High speed transmission ratio (i1)	低速级传动比 Low speed transmission ratio (i2)	总传动比 General transmission ratio (i)	组合机型规格 Combination model size
0.06kW						
0.35	355	0.7	50	80	4000	40/75
0.28	419	0.5	50	100	5000	
0.5	405	1.4	60	50	3000	40/90
0.35	365	1.3	50	80	4000	
0.28	431	1.0	50	100	5000	
0.09kW						
14	37	0.8	10	10	100	25/30
9.3	49	0.6	10	15	150	
7	62	0.5	10	20	200	
5.6	66	0.5	10	25	250	
4.7	75	0.4	10	30	300	
3.5	107	0.3	10	40	400	
2.8	115	0.2	20	25	500	
2.3	135	0.2	20	30	600	
1.9	151	0.2	25	30	750	
1.6	178	0.2	30	30	900	
1.2	212	0.1	30	40	1200	
0.9	247	0.1	50	30	1500	
0.78	304	0.1	60	30	1800	
0.58	340	0.1	60	40	2400	
0.47	405	0.1	60	50	3000	
4.7	88	0.8	10	30	300	30/40
3.5	107	1.2	10	40	400	30/50
2.8	123	1.0	10	50	500	
2.3	159	0.9	20	30	600	
1.9	185	0.8	25	30	750	
1.6	212	0.7	30	30	900	
1.6	200	1.0	15	60	900	30/63
1.2	263	0.9	30	40	1200	
0.93	305	0.7	30	50	1500	
0.9	359	1.1	50	30	1500	40/75
0.78	404	1.0	60	30	1800	
0.58	496	0.7	60	40	2400	
0.5	608	0.9	60	50	3000	40/90
0.35	548	0.8	50	80	4000	
0.12kW			10			
4.7	118	1.2	10	30	300	30/50
3.5	142	0.9		40	400	
2.8	164	0.7	10	50	500	
2.8	171	1.3	10	50	500	30/63
2.3	208	1.1	15	40	600	
1.9	241	0.9	15	50	750	

输出转速 Output speed (r/min)	输出转矩 Output torque (N.m)	使用系数 (fs)	传动比 Ratio (i)	机型号 Type
4kW				
28	1036	1.4	50	NMRV150
23.3	1195	1.1	60	
17.5	1484	0.8	80	
28	1019	2.3	50	NMRV185
23.3	1195	1.9	60	
17.5	1500	1.4	80	
14	1766	1.0	100	
5.5kW				
186.7	253	2.2	7.5	NMRV110
140	334	1.8	10	
93.3	484	1.4	15	
70	638	1.0	20	
56	711	0.9	25	
140	333	2.5	10	NMRV130
93.3	490	1.9	15	
70	645	1.4	20	
56	788	1.2	25	
46.7	900	1.2	30	
35	1171	0.9	40	
28	1103	0.8	50	
70	645	2.0	20	NMRV150
56	788	1.5	25	
46.7	934	1.3	30	
35	1171	1.3	40	
28	1426	1.0	50	
23.3	1643	0.8	60	
56	777	2.5	25	NMRV185
46.7	864	2.5	30	
35	1168	2.2	40	
28	1402	1.7	50	
23.3	1643	1.4	60	
17.5	2063	1.0	80	
7.5kW				
186.7	345	1.6	7.5	NMRV110
140	455	1.3	10	
93.3	660	1.0	15	
186.7	349	2.1	7.5	NMRV130
140	455	1.8	10	
93.3	668	1.4	15	
70	880	1.0	20	
56	1074	0.9	25	
46.7	1228	0.8	30	
35	1596	0.7	40	

输出转速 Output speed (r/min)	输出转矩 Output torque (N.m)	使用系数 (fs)	传动比 Ratio (i)	机型号 Type
7.5kW				
70	880	1.5	20	NMRV150
56	1074	1.1	25	
46.7	1274	0.9	30	
35	1596	1.0	40	
56	1060	1.8	25	NMRV185
46.7	1179	1.9	30	
35	1593	1.6	40	
28	1911	1.2	50	
23.3	2240	1.0	60	
11kW				
186.7	512	2.3	7.5	NMRV150
140	675	1.8	10	
93.3	990	1.3	15	
70	1291	1.0	20	
56	1576	0.8	25	
93.3	922	1.9	15	NMRV185
70	1274	1.8	20	
56	1554	1.2	25	
46.7	1729	1.3	30	
35	2336	1.1	40	
28	2803	0.8	50	
15kW				
186.7	698	1.7	7.5	NMRV150
140	921	1.3	10	
93.3	1351	0.9	15	
70	1760	0.7	20	
140	900	2.0	10	NMRV185
93.3	1257	1.4	15	
70	1737	1.3	20	
56	2120	0.9	25	
46.7	2357	0.9	30	
18.5KW				
186.7	823	2.1	7.5	NMRV185
140	1110	1.6	10	
93.3	1550	1.1	15	
70	2143	1.0	20	
22KW				
186.7	979	1.8	7.5	NMRV185
140	1320	1.3	10	
93.3	1844	0.9	15	
70	2548	0.9	20	

输出转速 Output speed (r/min)	输出转矩 Output torque (N.m)	使用系数 (fs)	传动比 Ratio (i)	机型号 Type
1.5kW				
140	90	2.2	10	NMRV75
93.3	130	1.5	15	
70	168	1.3	20	
56	205	1.0	25	
46.7	233	1.0	30	
70	171	2.1	20	NMRV90
56	210	1.6	25	
46.7	239	1.7	30	
35	307	1.2	40	
28	368	0.9	50	
23.3	424	0.8	60	
35	319	2.2	40	NMRV110
28	384	1.7	50	
23.3	442	1.4	60	
17.5	548	0.9	80	
2.2kW				
186.7	100	1.8	7.5	NMRV75
140	132	1.5	10	
93.3	191	1.0	15	
70	240	0.9	20	
46.7	269	0.8	30	
186.7	101	2.9	7.5	NMRV90
140	134	2.3	10	
93.3	194	1.9	15	
70	252	1.4	20	
56	308	1.1	25	
46.7	351	1.2	30	
35	433	1.0	40	
28	393	0.9	50	
70	255	2.5	20	NMRV110
56	315	2.2	25	
46.7	356	2.0	30	
35	468	1.5	40	
28	563	1.2	50	
23.3	648	1.0	60	
35	468	2.2	40	NMRV130
28	563	1.7	50	
23.3	648	1.4	60	
17.5	816	1.0	80	
14	869	0.8	100	
28	570	2.5	50	NMRV150
23.3	657	1.9	60	
17.5	816	1.4	80	
14	960	1.0	100	

输出转速 Output speed (r/min)	输出转矩 Output torque (N.m)	使用系数 (fs)	传动比 Ratio (i)	机型号 Type
3kW				
186.7	136	1.4	7.5	NMRV75
140	180	1.1	10	
93.3	261	0.8	15	
186.7	138	2.1	7.5	NMRV90
140	182	1.7	10	
93.3	264	1.4	15	
70	344	1.0	20	
56	420	0.8	25	
46.7	479	0.9	30	
93.3	264	2.5	15	NMRV110
70	348	1.9	20	
56	430	1.6	25	
46.7	485	1.5	30	
35	638	1.1	40	
28	767	0.9	50	
56	429	2.2	25	NMRV130
46.7	491	2.1	30	
35	638	1.6	40	
28	767	1.3	50	
23.3	884	1.0	60	
17.5	1113	0.8	80	
28	777	1.8	50	NMRV150
23.3	896	1.4	60	
17.5	1113	1.0	80	
14	1310	0.8	100	
4kW				
186.7	182	1.0	7.5	NMRV75
140	240	0.8	10	
186.7	184	1.6	7.5	NMRV90
140	243	1.3	10	
93.3	352	1.0	15	
70	458	0.8	20	
140	242	2.5	10	NMRV110
93.3	352	1.9	15	
70	464	1.4	20	
56	573	1.2	25	
46.7	647	1.1	30	
56	573	1.6	25	NMRV130
46.7	655	1.6	30	
35	851	1.2	40	
28	1023	1.0	50	
23.3	1179	0.8	60	

输出转速 Output speed (r/min)	输出转矩 Output torque (N.m)	使用系数 (fs)	传动比 Ratio (i)	机型号 Type
0.25kW				
28	56	2.4	50	NMRV63
23.3	63	2.0	60	
17.5	78	1.6	80	
14	87	1.4	100	
0.37kW				
186.7	16	2.4	7.5	NMRV40
140	21	1.9	10	
93.3	31	1.3	15	
70	39	1.0	20	
56	47	0.8	25	
46.7	53	0.8	30	
140	21	3.3	10	NMRV50
93.3	31	2.4	15	
70	40	1.8	20	
56	48	1.5	25	
46.7	55	1.5	30	
35	68	1.1	40	
28	80	0.9	50	
23.3	89	0.8	60	
35	70	2.1	40	NMRV63
28	83	1.6	50	
23.3	94	1.4	60	
17.5	115	1.1	80	
14	129	0.9	100	
0.55kW				
186.7	25	2.9	7.5	NMRV50
140	32	2.2	10	
93.3	46	1.6	15	
70	59	1.2	20	
56	71	1.0	25	
46.7	81	1.0	30	
35	80	0.9	40	
70	60	2.2	20	NMRV63
56	73	1.8	25	
46.7	83	1.9	30	
35	105	1.4	40	
28	124	1.1	50	
23.3	140	0.9	60	
35	108	2.0	40	NMRV75
28	129	1.6	50	
23.3	146	1.4	60	
17.5	180	1.1	80	
14	206	0.9	100	
17.5	189	1.5	80	NMRV90
14	221	1.2	100	
186.7	34	2.1	7.5	
140	44	1.6	10	

输出转速 Output speed (r/min)	输出转矩 Output torque (N.m)	使用系数 (fs)	传动比 Ratio (i)	机型号 Type
0.75kW				
93.3	63	1.2	15	NMRV50
70	81	0.9	20	
93.3	63	2.2	15	NMRV63
70	83	1.6	20	
56	100	1.3	25	
46.7	114	1.4	30	
35	143	1.0	40	
56	102	2.0	25	NMRV75
46.7	117	2.0	30	
35	147	1.5	40	
28	177	1.2	50	
23.3	200	1.0	60	
28	184	1.8	50	NMRV90
23.3	212	1.5	60	
17.5	258	1.1	80	
14	302	0.9	100	
1.1kW				
186.7	49	2.6	7.5	NMRV63
140	65	2.0	10	
93.3	93	1.5	15	
70	122	1.1	20	
56	146	0.9	25	
46.7	167	1.0	30	
35	165	0.9	40	
93.3	95	2.1	15	NMRV75
70	123	1.7	20	
56	150	1.3	25	
46.7	171	1.3	30	
35	216	1.0	40	
28	264	0.9	50	
23.3	223	0.8	60	
35	225	1.6	40	NMRV90
28	270	1.3	50	
23.3	311	1.0	60	
17.5	328	0.9	80	
28	281	2.3	50	NMRV110
23.3	324	1.9	60	
17.5	402	1.3	80	
14	473	1.0	100	
1.5kW				
186.7	67	1.9	7.5	NMRV63
140	89	1.5	10	
93.3	127	1.1	15	
70	166	0.8	20	

选型参数
Parameter Selections

单级减速机（法兰输入，输入转速1400r/min)/(配4级电机)
Single step reducer(flange input,input speed is 1400r/min)/(matched with 4 poles motor)

输出转速 Output speed (r/min)	输出转矩 Output torque (N.m)	使用系数 (fs)	传动比 Ratio (i)	机型号 Type
0.06kW				
186.7	2.6	4.2	7.5	NMRV25
140	3.4	3.5	10	
93.3	4.9	2.5	15	
70	6.1	2.0	20	
46.7	8.2	1.6	30	
35	10	1.3	40	
28	12	0.9	50	
23.3	14	0.7	60	
186.7	2.6	6.9	7.5	NMRV30
140	3.4	5.4	10	
93.3	4.7	3.8	15	
70	6	3.0	20	
56	7	3.0	25	
46.7	8	2.5	30	
35	9.7	1.9	40	
28	11	1.5	50	
23.3	13	1.3	60	
17.5	14	0.9	80	
0.09kW				
186.7	3.9	2.8	7.5	NMRV25
140	5.1	2.4	10	
93.3	7.3	1.6	15	
70	9.2	1.3	20	
46.7	12	1.1	30	
35	15	0.9	40	
186.7	3.9	4.6	7.5	NMRV30
140	5	3.6	10	
93.3	7.1	2.5	15	
70	9	2.0	20	
56	10	2.0	25	
46.7	12	1.7	30	
35	14	1.2	40	
28	17	1.0	50	
23.3	19	0.9	60	
28	19	2.0	50	NMRV40
23.3	21	1.7	60	
17.5	26	1.3	80	
14	29	1.0	100	
0.12kW				
186.7	5.2	3.4	7.5	NMRV30
140	6.7	2.7	10	
93.3	9.5	1.9	15	
70	12	1.5	20	
56	14	1.5	25	
46.7	16	1.3	30	
35	19	0.9	40	
28	23	0.8	50	

输出转速 Output speed (r/min)	输出转矩 Output torque (N.m)	使用系数 (fs)	传动比 Ratio (i)	机型号 Type
0.12kW				
46.7	17.2	2.6	30	NMRV40
35	21	1.9	40	
28	25	1.5	50	
23.3	28	1.3	60	
17.5	34	1.0	80	
14	38	0.8	100	
23.3	29	2.3	60	NMRV50
17.5	35	1.9	80	
14	40	1.4	100	
0.18kW				
186.7	7.8	2.3	7.5	NMRV30
140	10	1.8	10	
93.3	14	1.3	15	
70	18	1.0	20	
56	21	1.0	25	
46.7	24	0.8	30	
70	19	2.0	20	NMRV40
56	23	1.7	25	
46.7	26	1.7	30	
35	32	1.3	40	
28	38	1.0	50	
23.3	43	0.8	60	
35	32	2.3	40	NMRV50
28	39	1.9	50	
23.3	43	1.6	60	
17.5	52	1.2	80	
14	60	0.9	100	
0.25kW				
186.7	11	3.6	7.5	NMRV40
140	14	2.8	10	
93.3	21	1.9	15	
70	27	1.5	20	
56	32	1.2	25	
46.7	36	1.3	30	
35	44	0.9	40	
28	37	0.8	50	
70	26	2.7	20	NMRV50
56	32	2.2	25	
46.7	37	2.3	30	
35	46	1.7	40	
28	54	1.4	50	
23.3	60	1.1	60	
17.5	72	0.9	80	

减速机的承载能力 The carriying ability of worm micteducer

附表（Attached table)

蜗杆分度圆滑动速度(m/s) Reference circle of worm slide(m/s)	蜗轮蜗杆油牌号 Lubrication type
≤2.2	G-N680W(G-N460W)
>2.5-5	G-N320W
>5-12	G-N220W

根据表2及表3，可找出有关减速机的工作系数(sf)
By table 2 and 3,can find out the service factor(sf)about worm reducer.

表2
(Table 2)

每小时断性操作次数少于10次 NO of starts per hour <10			
加于减速机的负荷性质 Nature of load generated by driven machine	每日工作时数 Hours running per day		
	<2	2~8	8~16
带均衡负荷 Uni form	sf=0.8	sf=1	sf=1.25
带中级震荡 Moderate shock	sf=1	sf=1.25	sf=1.5
带重级震荡 heavy shock	sf=1.25	sf=1.5	sf=1.75

表3
(Table 3)

每小时间断性或连续性操作次数大于10次 NO of starts per hour>10			
加于减速机的负荷性质 Nature of load generates by driven machine	每日工作小时数 Hours running per day		
	<2	2~8	8~24
带均衡负荷 Uniform	sf=1	sf=1.25	sf=1.75
带中级震荡 Moderate shock	sf=1.5	sf=1.75	sf=2
带重级震荡 Heavy shock	sf=1.75	sf=2	sf=2.25

减速机的安装式及对应的加油量、润滑油品种
Installation type of reducer and the corresponding oil feeding amount and lubrication barieties

1.安装尺寸 Mounting size

○ 注：· · · 加油孔及通气孔 Oil filling hole and air hole ◒ · · · 视油镜 Oil level view mirror ● · · · 排油塞 Oil drain plug

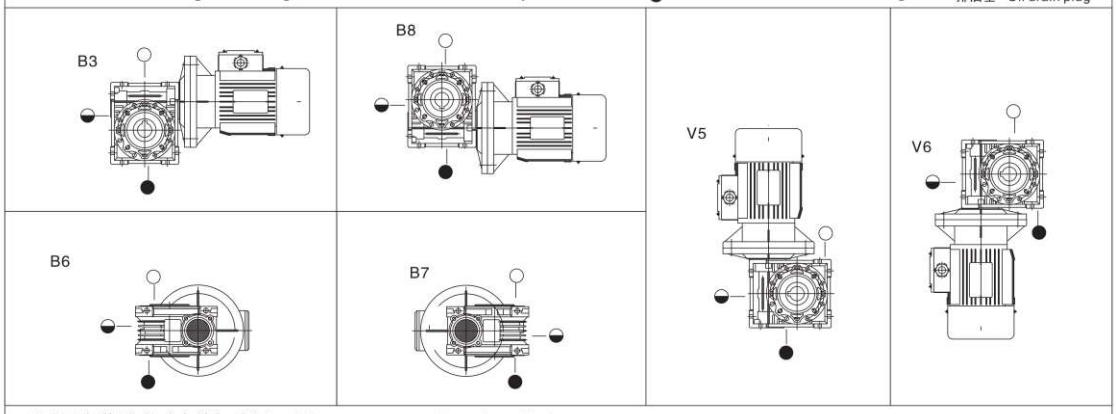

2.不同安装型式对应的加油量 Oil amount to various installation patterns

蜗杆减速机型号 Types of worm speed reducers		RV25	RV30	RV40	RV50	RV63	RV75	RV90	RV110	RV130	RV150	RV185
润滑用油（公升）Lubricating oil	B3	0.02	0.04	0.08	0.15	0.3	0.55	1.0	3.0	4.5	7.0	10
	B6.B7								2.5	3.5	5.4	8.0
	B8								2.2	3.3	5.1	7.5
	V5								3.0	4.5	7.0	10
	V6								2.2	3.3	5.1	8.0

3.润滑油品种 Lubricating oil

蜗杆减速机型号 Types of worm speed reducers		RV25、RV40、RV50、RV63、RV75、RV90	RV110、RV130、RV150、RV185		
	润滑油 Lubricant	Oil sintetice synthetic oil	Oil sintetice synthetic oil	Oil minerale mineral oil	
	环境温度 Ambient Temperature	−25℃ ~ +50℃	−25℃ ~ +50℃	−5℃ ~ +40℃	−15℃ ~ +40℃
ISO		VG320	VG320	VG460	VG320
国内使用 Used in interior		WA460	WA460		
国外使用 Used in foreigh countries	AGIP	TELIUM VSF320	TELIUM VSF320	BLASIA 460	BLASIA 220
	SHELL	TIVELA S320	TIVELA S320	OMALA OIL 460	OMALA OIL 220
	ESSO	S220	S220	SPARTAN EP 460	SPARTAN EP 220
	MOBIL	GLYGOYLE 30	GLYGOYLE 30	MOBIL GEAR 634	MOBIL GEAR 630
	CASTROL	ALPHASYN PG 320	ALPHASYN PG 320	ALPHA MAX 460	ALPHA MAX 220
	BP	ENERGOL SG-XP 320	ENERGOL SG-XP 320	ENETGOL SG-XP 460	ENETGOL SG-XP 220

减速机的输出法兰 "F、FL"、输出轴 "DZ、SZ" 安装形式
Installation pattern of output flange F、FL,output spindle DZ、SZ of speed reducers

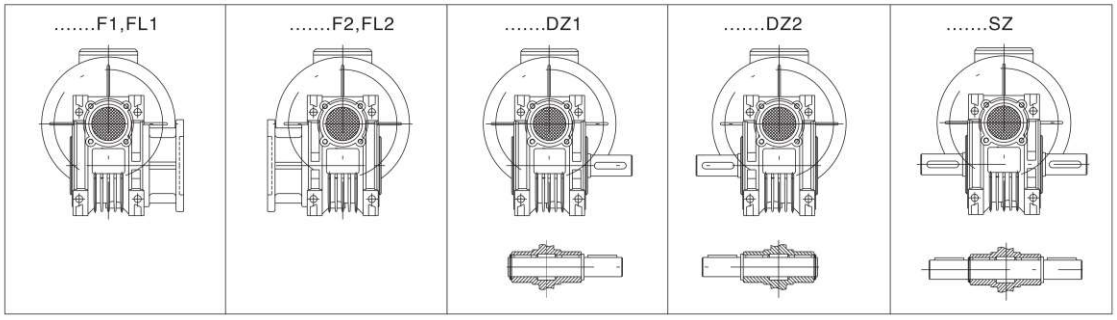

电机接线盒安装形式 Installation pattern of motor wiring box

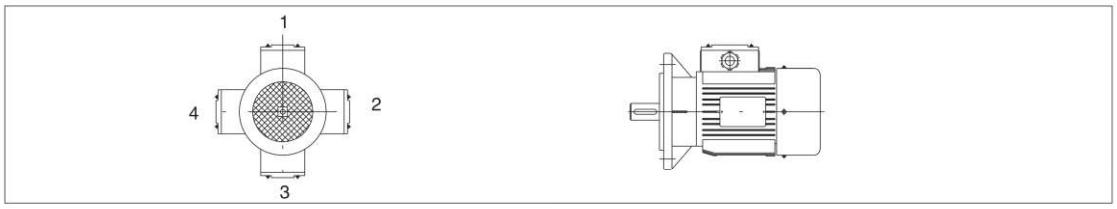

标记l示例 Example of sign

1.NMRV40-30-Y0.18-F1-SZ
意为：NMRV型，机座规格40，公称传动比30，配Y系列0.18KW电机、F1输出法兰、双输出轴
2.NRV40-30-F1
意为：NRV型 机座规格40，公称传动比30，不配电机，配输出法兰F1
1.NMRV40-30-Y0.18-F1-SZ
Means:mokel:NMRV size:40
Nominal ratio:30
Epuipped electric motor:0.18KW in series Y
Output flange:F1
Double output shaft:SZ
2.NRV40-30-F1
Means:mokel:NRV size:40
Nominal ratio:30
Without electric motor
Output flange:F1

使用维护要求 The requirement of using and maintain

安装时请不要对减速机输出部件，箱体施加压力，联接时请满足机器（械）与减速机之间的同轴度与垂直度的相应要求。
减速机初始运行至400小时应重新更换润滑油，其后的换油周期约为4000小时。
箱体内应保留足够的润滑油量，并定时检查。当发现油量减少或油质变坏时应及时补足或更换润滑油。（润滑油牌号见附表）
应注意保持减速机外观清洁，及时清除灰尘、污物以利于散热。

Do not make pressure on output part and box when mounting it ,
It must replace lubrication oil after it runs 400 hours when first using it ,after it , replace lubrication oil per running 4000 hours.
It must keep coaxial degree and vertical degree in just lever when conjoining reducer with other device .
Must keep plenty of oil lubrication in the reducer and check it often.
Must add or replace in time when oil reduce or get bad. (lubrication type see attached table)
It is useful to keep reducer clean so that reducer radiates warmth more efficiently.

联体组合式RV系列蜗杆减速机标记方式：
Indication for combination RV series worm speed reducer

□ □ / □ — □ — P — □ — □ — □

- 输入、出轴要求：YZ、DZ1、DZ2、SZ;不配省略
  Input/output shaft tequirement:YZ、DZ1、DZ2、SZ;omitted when not required.
- 安装附件要求：F1、F2、FL1、FL2、TA;不配省略
  Rquired accessaries,F1、F2、FL1、FL2、TA;omitted when not required.
- 安装形式
  Mounting type
- 配电机类型及功率：不配省略（配输入法兰应注明）P为电机极数，4极时省略。
  Motor type and power ,omitted when not required(indicated when input flange requirde)P:motor pole number,4 poles omittde
- 机组公称传动比
  Normial ratio for combination set
- 规格（前为第一级机座号，后为第2级机座号）
  Size(1st stage,2nd stage)
- 类型：NMRV、NRV
  Type:NMRV、NRV

安装方式及代号
Mounting type and it is symbol

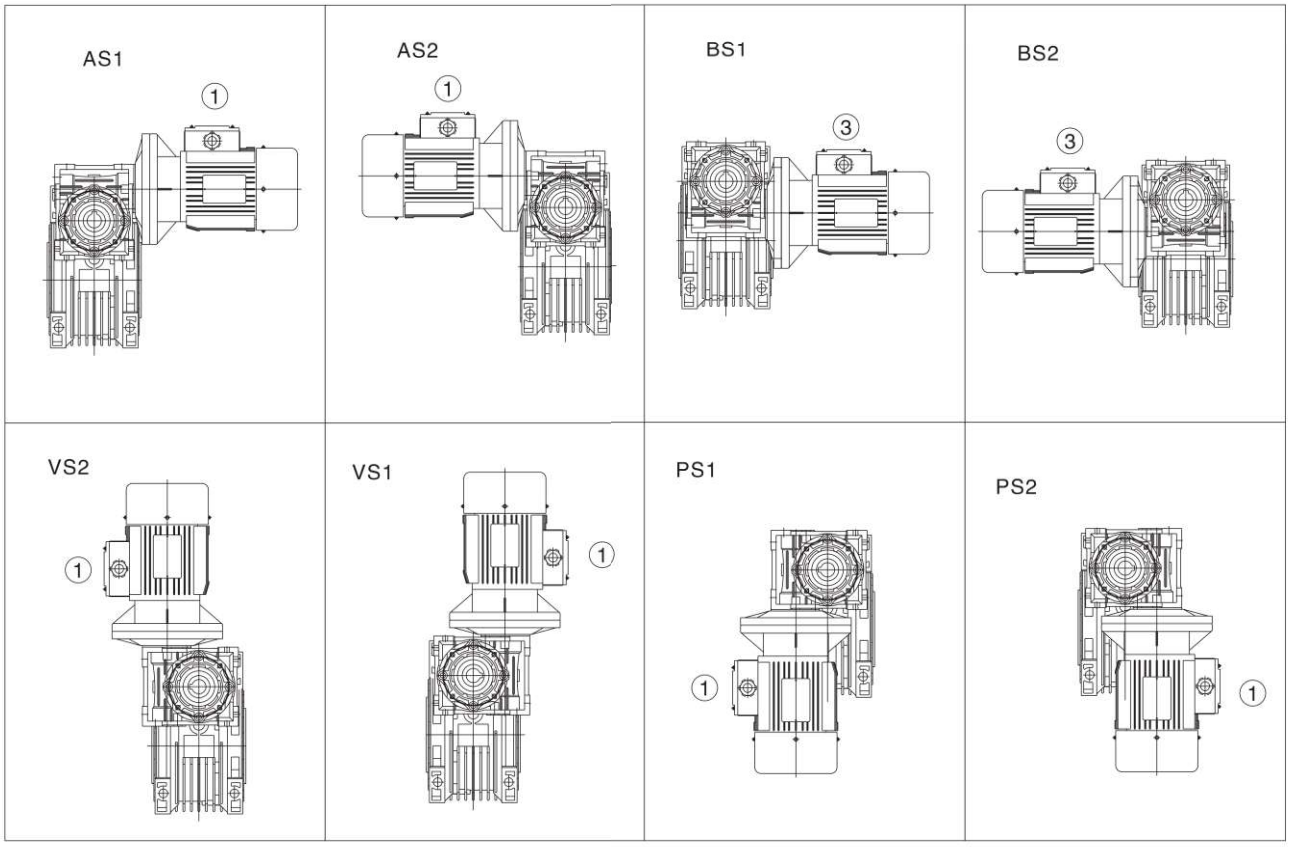

图1
(Chart 1)

NMRV.....

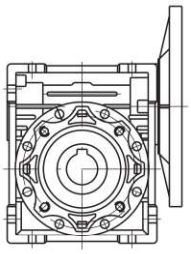

NMRV.....YZ

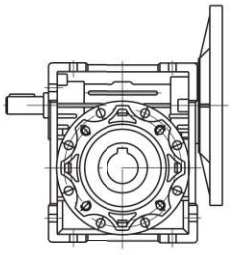

.....TA

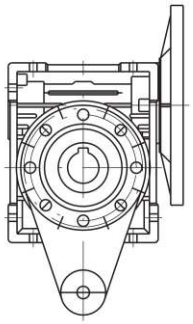

NRV.....

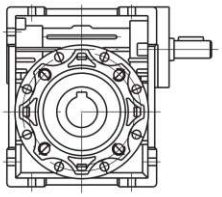

NRV.....YZ

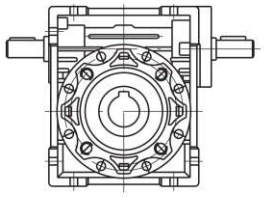

.....F1,FL1

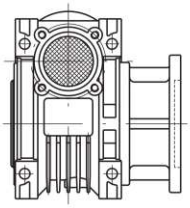

.....F2,FL2

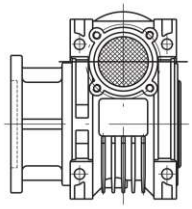

.....DZ1

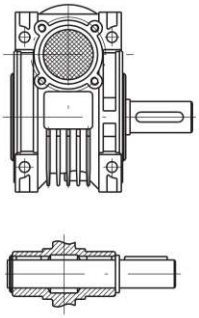

.....DZ2

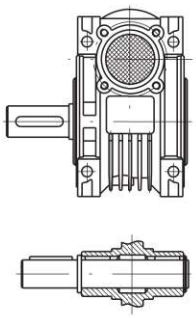

.....SZ

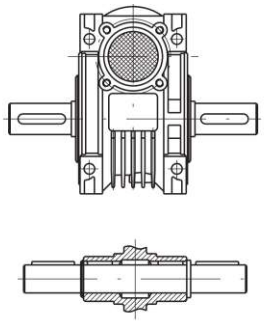

标记方式 Model designation

1 2 — 3 — 4 — 5 — 6

1：
NMRV型
Modle NMRV
NRV型
Modle NRV

2：
机座规格 25–185
Type 25–185

3：
公称传动比7.5–100
Nomianl ratio 7.5–100

4：
电机类型及功率(四级)Y(KW)
Electric Motor type and power Y(KW)
不配电机省略
Omiting without it

5：
安装用附件要求：F1、FL1
Accessory for mounting:F1、FL1
F2、FL2
F2、FL2
TA
TA
不配省略
Omiting without it

6：
输入 、出轴要求：YZ
Input and output shaft Code：YZ
DZ1、DZ2
DZ1、DZ2
SZ
SZ
不配省略
Omiting without it

代号标记注解
Sign explantion

NMRV	带输入法兰式减速机（配合电机使用） With input flange (using with electric motor)
NRV	输入轴式减速机 With input shaft
25–30–40–50–63–75–90–110–130–150–185	减速机的机座规格（中心距参数） Type(centre distance)
7.5–10–15–20–25–30–40–50–60–80–100	公称传动比 Nominal ratio
Y0.18	配普通Y系列电动机，功率为0.18KW With electric motor in series Y, the power is 0.18KW
YEJ0.18	配制动电机，功率为0.18KW With breaking motor,the power is 0.18KW
F.....(1–2).FL.....(1–2)	输出法兰及安装型式（F–输出短法兰，FL–输出长法兰） Output flange and mounting position (F–output short flang. FL–output long flang)
TA	转矩臂 With torque arm
YZ	配延伸蜗杆轴 With extention worm shaft
DZ1,DZ2	配单向输出轴 With single output shaft
SZ	配双向输出轴 With double output shaft

RV系列蜗杆减速机 RV Series worm reducer

蜗杆减速机性能特点
The advantages of worm reducer

方箱外形，优质铝合金压铸箱体，美观大方。
散热性能优良，承载能力大。
多面安装.空心输出轴结构.另配有各种输入.输出方式,并能方便的与其他传动机械组合,适应性强.
机型小巧.结构紧凑,体积小.重量轻.节省安装空间.
传动平稳.噪音小.
安全可靠.经济耐用.

High quality Aluminum alloy ,appearance elegant, efficent radiator, high carrying ability.
Installed in multi-surfaces,hollow output shaft, various input and output type, conjoin other transmission machinery easily.
Small size, constriction compact, lightweight, and save place for mounting.
Run steadily and low noise.
High reliability and high effiliency.

产品结构图
Basic structure

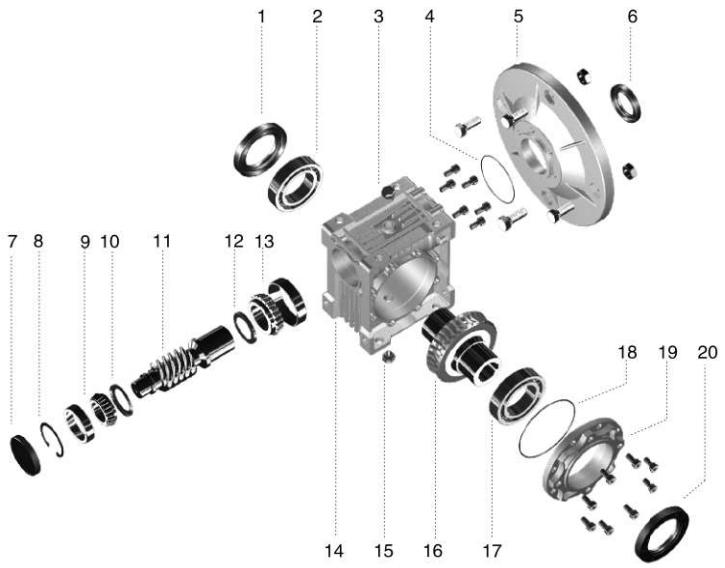

序号	名称		Name
1	油封	1	Oil seal
2	轴承	2	Bearing
3	通气帽	3	Breather vent
4	O型密封圈	4	O-type seal ring
5	输入法兰	5	Input flange
6	油封	6	Oil seal
7	密封端盖	7	Seal and cover
8	孔用弹性挡圈	8	Circlip hole use
9	轴承	9	Bearing
10	挡油盘	10	Oil baffle disc
11	蜗杆	11	Worm
12	挡油盘	12	Oil baffle sisc
13	轴承	13	Bearing
14	箱体	14	Tank
15	螺塞	15	Plug screw
16	蜗轮	16	Gear
17	轴承	17	Bearing
18	O型密封圈	18	O-type seal ring
19	轴承端盖	19	Bearing and cover
20	油封	20	Oil seal

RV SERIES

worm reducer

RV 系列蜗杆减速机

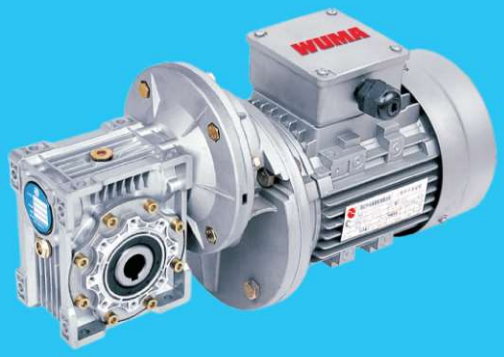

Content 目录

1.RV系列蜗杆减速机
RV Series worm reducer P01

①.标准型RV系列蜗杆减速机
Standard type RV series worm reduer P01

②.NMRV系列蜗杆减速机与MB、MBN系列
无极变速机（基本型）组合型
NMRV series the technical date of unit which is consisted of
Worm micro reducer and MB、MBN series variator(basic type) P30

③ PC系列齿轮减速机及PC+NMRV组合型齿轮-蜗杆减速机
Structural Performance of PC Serial Gear Reducer P38

2.MB、MBN系列行星锥盘无极变速机及其（基本型）
与X系列摆线针轮减速机的组合型
MB、MBN series planetary cone-disk variator
and X series cyclod combined reducer P51

3.WB 系列微型摆线针轮减速机
WB series cycloid reducer P82

4. X、B、JXJ 系列摆线针轮减速机
X、B、JXJ series cycloid reducer P89

5. 减（变）速机订货须知
Notices in speed reducer (speed changer) procurement P108

董事长吕锦弟随前国家主席胡锦涛赴加拿大/美国参加经济贸易活动

Mr Lu Jin Di,director General of wuma,accompanying chairman Hu Jin tao visiting in USA and Canada

Transmission Miracle Corporation Honour

传动奇迹之企业荣誉

By looking for quality products, our inspection is appraised as HIGH STRICT, therefore, we received below honors and reputation from market, they are the driving force for us to keep work harder.

唯有对产品质量的不断追求，我们的质量检测在业内公认为“苛刻”，唯其如此，我们才有了如此诸多的殊荣。当然，社会各界的认同不会成为我们骄傲的原因，因为他只能作为我们前进的进力。

Transmission Foundation Research and Development

传动基础之企业研发

In the begining of our career,qaulity is our only objective,more investment has been injected with upgrade equipments,we do believe no well-round equipment,no well-round quality guarantee.

艰苦创业，只能发扬其精神，我们从创业伊始便将产品质量作为不懈追求的目标，所以我们在硬件配置方面不遗余力，我们深信没有过硬的硬件配置就不会有过硬的产品质量。

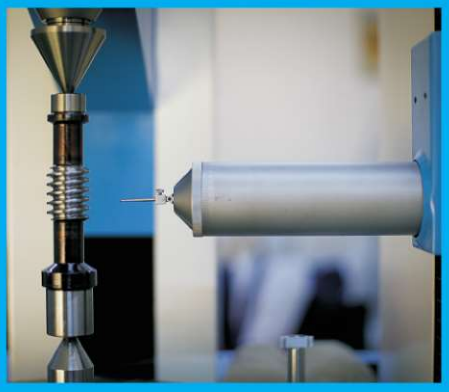

Transmission Foundation Facilities and Strengh

传动基础之企业实力

Our company have high precision computerized lathe and machining center, advanced equipment and inspection measurements, well-round and skillful technology as well as restrict quality control management. In gathering of high-educated and advanced technology team which could ensure stable quality products by new technique, new materials, and new machining methods. And at the same time, also they are the source for innovation.

拥有高精度的数控机床和加工中心，先进的设备及检测仪器，精良的工艺以及严格完善的质量管理体系，并聚集具有专业技术精英和领先水平的科技队伍，充分利用新技术、新工艺、新材料保证产品的稳定性和可靠性。产品质量取源于制造手段的先进、精品意识源于不断的创新。

About Transmission

公司简介

浙江午马减速机有限公司是研制、生产各类减速机、无级变速机等传动、驱动机械的专业化公司，是中国减、变速机行业协会会员。

公司自创立至今，坚持科技创新、研究和引进先进技术，不断开发、研制市场需求的产品。现主要生产RV系列蜗轮蜗杆减速机，MB、MBN系列行星锥盘无级变速机，WS系列齿轮-蜗杆减速机,WR、WF、WK系列硬齿面圆柱齿轮减速机，X、B系列摆线针轮减速机，WB微型摆线减速机，WH/WB系列大功率齿轮减速机，多功能多面体硬齿面组合减速机,WAH系列准双曲面齿轮减速机，精密蜗轮蜗杆减速机等十余个系列、数千种规格的通用产品。并为用户提供特殊、专用产品。产品具有系列化、模块化优点，广泛应用于食品包装、啤酒饮品、环保工程、冶金矿山、仓储物流、起重输送、烟草轻工、立体停车、橡胶塑料等各行业的传动、驱动领域。公司拥有国内外先进的磨齿机、高精度的数控机床和加工中心以及齿轮检测中心、三坐标测量仪等加工和检测设备，具有年产10万台减速机的生产能力以及强劲的技术实力。

“锐意进取，努力创新，质量第一，信誉为本”，向用户提供可信性的产品是公司的宗旨。公司通过ISO9001：2000质量管理体系认证，GB/T28001-2001职业健康安全管理体系认证，ISO14001:2004,环境管理体系认证，计量检测确认合格证书，标准化良好行为证书。2001年公司又获得了企业自营进出口资格证书。现公司产品遍及全国，出口欧、美、港、台、东南亚等国家及地区。历年被农行省分行授予“AAA级资信企业”，被鹿城区人民政府授予“首批百家诚信企业，名牌产品，2007年被评为“浙江省高新技术企业”及“技术开发研究中心”，2008年被评为“国家级火炬计划企业”，2012年被评为“国家级高新技术企业”。

公司地处沿海经济带浙江省温州市，国内在北京、天津、上海、佛山、无锡、宁波、武汉、青岛、淄博、成都、长沙、重庆、合肥、广州、泉州等各地设有经营办事处为尊敬的用户朋友提供及时、满意的服务。

午马减速机

WUMA

REDUCER

Introduction

Zhejiang Wuma Reducer Co., LTD. is a transmission and driving machinery company who specializing in research, development and production of various speed reducers and variators etc. It is a member of China Speed Reducer and Variator Industrial Association.

Since our establishment, we have insisted on science and technology innovation, researching and importing advanced technology, as well as continuously developing new products to meet the market requirement. The main products are RV series worm reducer, MB、MBN series planetary cone-disk variator, WR ,WK ,WF series helical gear reducer, WS series helical-worm gear reducer, WH/WB series gear reducer and the multi-function polyhedron hard teethface combination reducer, WAH series gear reducer, precision worm gearbox etc, more than ten series products with thousands of specifications universal products. We can also provide customized products. The products are featured with serialized and modularized advantages, and have been widely used in the transmission and driving fields for all types of industries. Such as food packing, bear, beverage, environmental protection, metallurgy, storage transportation, crane, conveyer, tobacco light industry, solid packing, rubber and plastic industry and so on.

Our company has advanced gear grinders, machining center and inspection center, as well as universal tool microscope etc. testing and machining equipment. We have an annual production capacity of 100,000 sets of reducers.

Aimed at "creative development, innovation, quality priority and creditability," our company always supplies reliable products to customers. We manufacture according to the ISO9001:2000 quality control system, we passed quality system certificate. GB/T28001-2001 occupational healthy and safety management system certificate, ISO14001:2004, GB/T 24001-2004 Environmental management system certificate, good standardizing practice certificate as well as certification for ability confirmation of inspection measurement and test. In 2012, we were honored by "National High-tech enterprise". In 2001, we obtained self-operating import and export qualification certificate. The products have been widely used all over China and exported to Europe, America, HongKong, Taiwan, South America and Southeast Asia etc.In 2007 we were received "Provincial High-tech Enterprise and technology researching and developing center, 2008 we became "National Torch Program Enterprise", and in the year of 2012, we were honored by "National High-Tech Enterprise"

Our company was located coastal economic area Wenzhou, Zhejiang province, we can provide on time delivery and great service to our customer with the support from our sale branch around China, such as Beijing, Tianjian, Shanghai, Foshan, Wuxi, Ningbo, Wuhan, Qingdao, Zibo, Chengdu, Changsha, Chongqin, Hefei, Guangzhou, Quanzhou and so on.

国家高新技术企业
National High-tech Enterprise
国家级火炬计划企业
National Torch Programme
National Torch Plan Enterprise

+++ 2019/B

浙江午马减速机有限公司 WUMA REDUCER

浙江午马减速机有限公司
ZHE JIANG WUMA REDUCER CO.,LTD.
浙江省温州市鹿城区轻工产业园区创强路10号
No.10 Chuangqiang Road,Light Industry Zone,
Lucheng District, Wenzhou ,Zhejiang ,China 325019
www.zjwuma.com

销售部:
Domestic Sale Department:
电话:(0577)86527211 86527178 86527111
传真:(0577)86527090
邮箱:wuma@zjwuma.com
zjwuma@zjwuma.com

外贸部:
Foreign Trade Department:
Tel:(0577)88134158 85956223
Fax:(0577)88134158
E-mail:wuma@zjwuma.com
zjwuma@zjwuma.com

Copyright 2019WUMA transmission .All Rights Reserved